FOR CONSTRUCTION
DATE: 01 JUNE, 2013

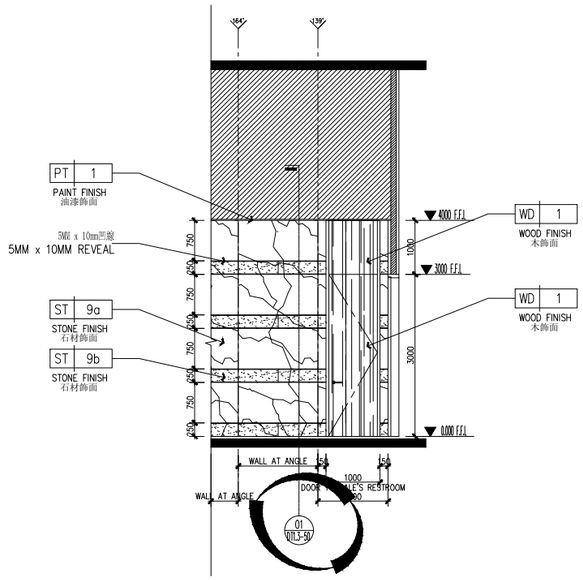

1 ELEVATION
立面图 SCALE 1:50

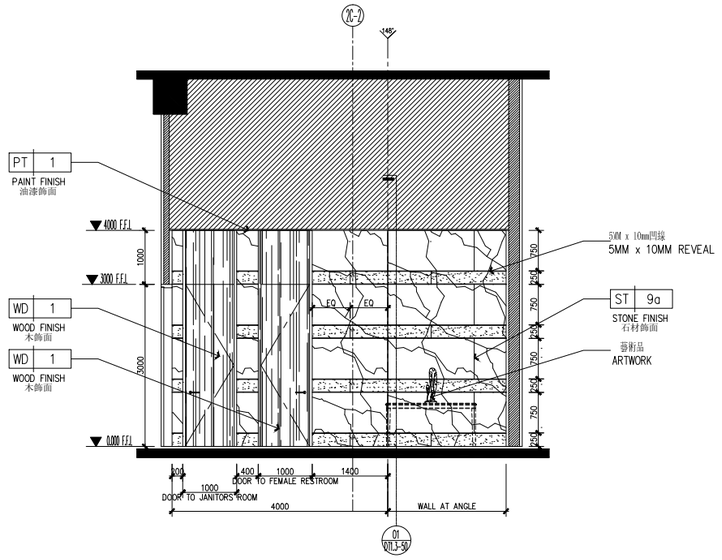

2 ELEVATION
立面图 SCALE 1:50

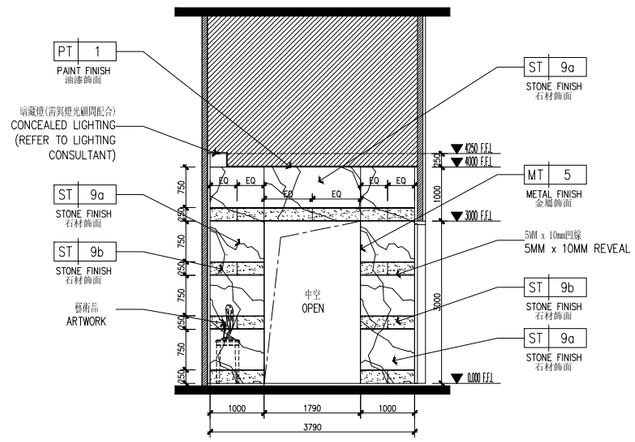

3 ELEVATION
立面图 SCALE 1:50

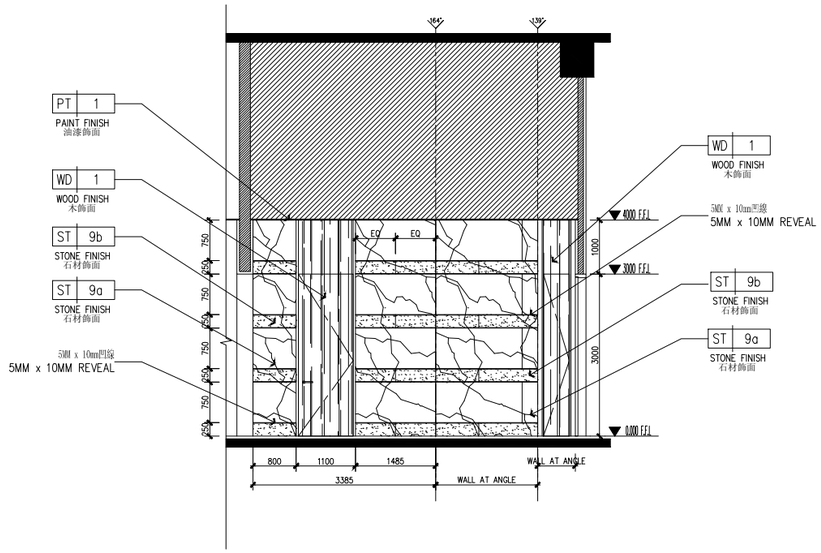

4 ELEVATION
立面图 SCALE 1:50

漳州融信皇冠假日酒店
RONGXIN CROWNE PLAZA HOTEL
ZHANGZHOU, CHINA

设计单位	CCD 香港郑中设计事務所 CHENG CHUNG DESIGN (HK) LTD.
图纸深化	YASHA 浙江亚厦装饰股份有限公司

4B01 - 4B02, EXCELLENCE TIMES PLAZA, 4068 YITIAN ROAD
FUTIAN DISTRICT, SHENZHEN, CHINA
TEL. NO. +86-755-2399-4999 FAX. NO. +86-755-8384-9557
E-MAIL: DESIGN@CCD.COM.HK

DRAWING TITLE

PUBLIC AREA - 公共部份
LEVEL 1 - 一層
RESTROOM - 洗手間
ELEVATION - 立面圖

ALL DESIGNS AND SPECIFICATIONS ARE THE PROPERTY OF CHENG CHUNG DESIGN (HK) LTD., AND CANNOT USED WITHOUT THEIR WRITTEN PERMISSION. THIS SHALL BE RETURNED UPON COMPLETION OF THE PROJECT. DO NOT SCALE DRAWINGS. ALL MEASUREMENTS MUST BE CHECKED ON SITE BY THE CONTRACTORS AND ANY DISCREPANCIES BROUGHT TO THE ATTENTION OF THE DESIGNER OR ARCHITECT. THIS DRAWING IS TO BE USED FOR THE PROJECT AND LIMITS INDICATED AND NOT TO BE USED ON ANY OTHER PROJECT.

REVISION	DATE
1	01 APR, 2013

Scale 比例	1 : 50 @ A1
Date 日期	20 DEC, 2012
Designed BY 設計	
Drawn BY 繪圖	
Job NO. 項目編號	HK-1024
APPROVED BY 核准	
Sheet NO. 圖號	EL-1.5-01