FOR CONSTRUCTION
DATE: 01 JUNE, 2013

漳州融信皇冠假日酒店
RONGXIN CROWNE PLAZA HOTEL
ZHANGZHOU, CHINA

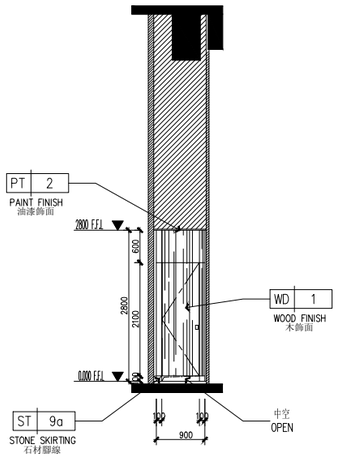

1 ELEVATION
立面图 SCALE 1:50

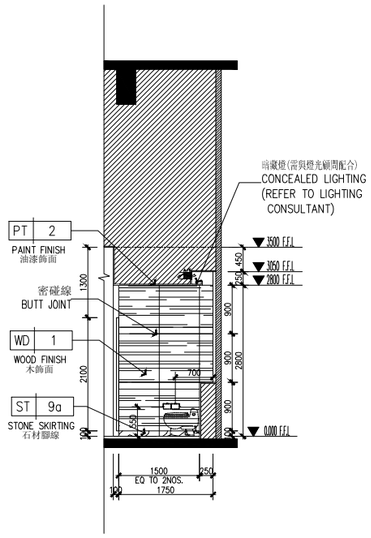

2 ELEVATION
立面图 SCALE 1:50

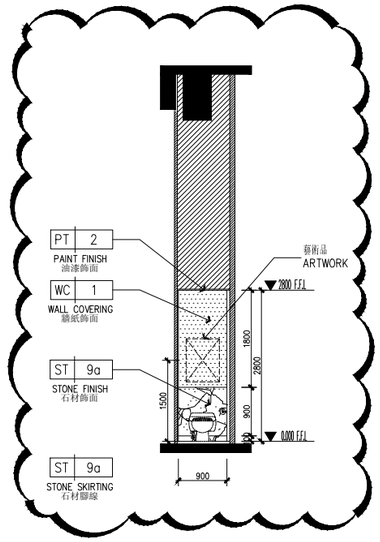

3 ELEVATION
立面图 SCALE 1:50

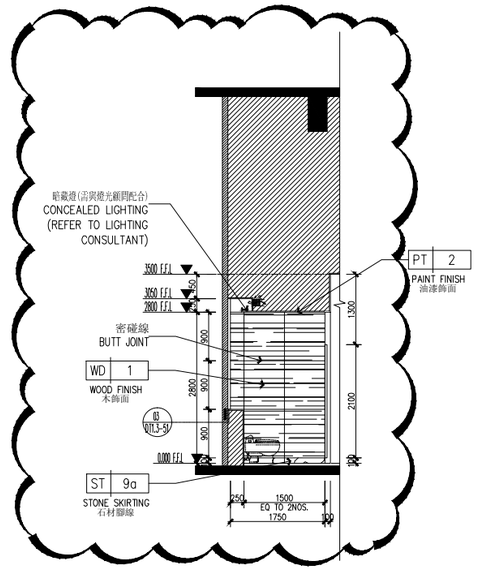

4 ELEVATION
立面图 SCALE 1:50

设计单位	CCD 香港郑中设计事务所有限公司 CHENG CHUNG DESIGN (HK) LTD.
图纸深化	YASHA 浙江亚厦装饰股份有限公司

4B01 - 4B02, EXCELLENCE TIMES PLAZA, 4068 YITIAN ROAD
FUTIAN DISTRICT, SHENZHEN, CHINA
TEL. NO. +86-755-2399-4999 FAX. NO. +86-755-8384-9557
E-MAIL: DESIGN@CCD.COM.HK

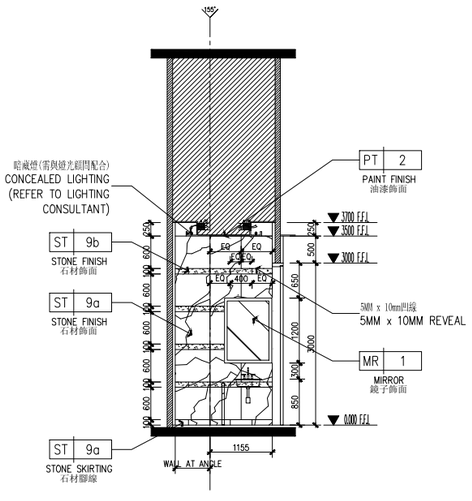

5 ELEVATION
立面图 SCALE 1:50

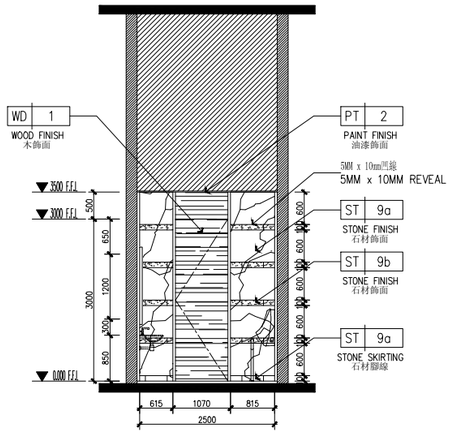

6 ELEVATION
立面图 SCALE 1:50

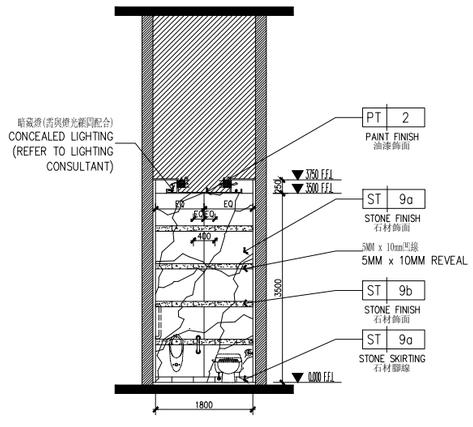

7 ELEVATION
立面图 SCALE 1:50

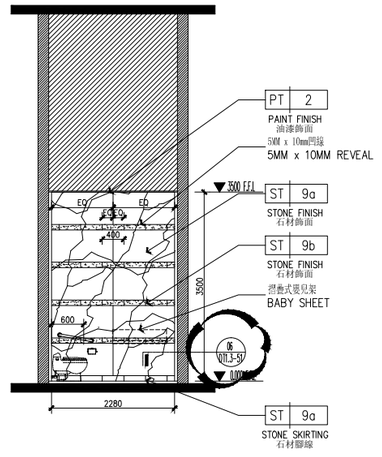

8 ELEVATION
立面图 SCALE 1:50

DRAWING TITLE

PUBLIC AREA - 公共部份
LEVEL 1 - 一層
RESTROOM - 洗手間
ELEVATION - 立面圖

ALL DESIGNS AND SPECIFICATIONS ARE THE PROPERTY OF CHENG CHUNG DESIGN (HK) LTD., AND CANNOT USED WITHOUT THEIR WRITTEN PERMISSION, SHD SAMD SHALL BE RETURNED UPON COMPLETION OF THE PROJECT. DO NOT SCALE DRAWINGS. ALL MEASUREMENTS MUST BE CHECKED ON SITE BY THE CONTRACTORS AND ANY DISCREPANCIES BROUGHT TO THE ATTENTION OF THE DESIGNER OR ARCHITECT. THIS DRAWING IS TO BE USED FOR THE PROJECT AND ITS INTENDED AND NOT TO BE USED ON ANY OTHER PROJECT.

REVISION	DATE
1	01 APR, 2013

Scale 比例	Date 日期
1 : 50 @ A1	20 DEC, 2012
Designed BY 設計	Drawn BY 繪圖
Job NO. 項目編號	APPROVED BY 核准
HK-1024	
Sheet NO. 圖號	

EL-1.5-03