FOR CONSTRUCTION
DATE: 01 JUNE, 2013

漳州融信皇冠假日酒店
RONGXIN CROWNE PLAZA HOTEL
ZHANGZHOU, CHINA

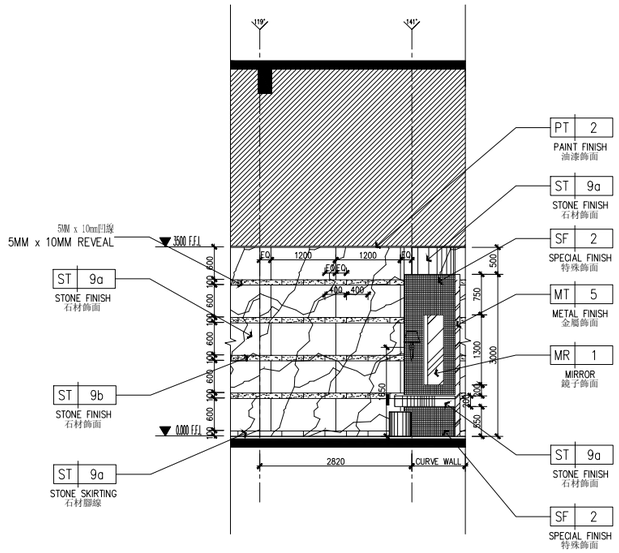

1 ELEVATION
立面图 SCALE 1:50

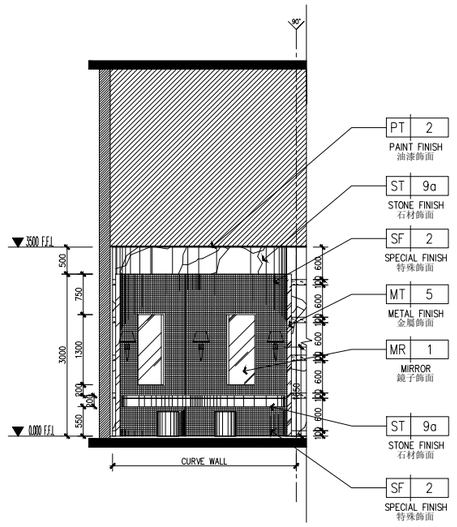

2 ELEVATION
立面图 SCALE 1:50

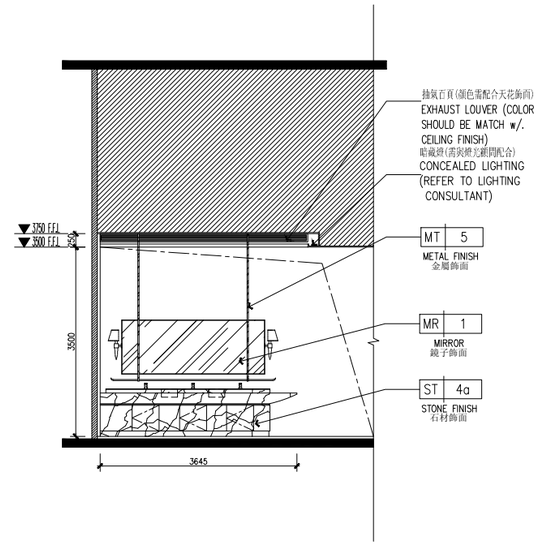

3 ELEVATION
立面图 SCALE 1:50

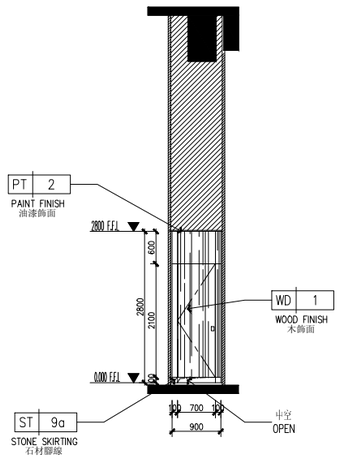

4 ELEVATION
立面图 SCALE 1:50

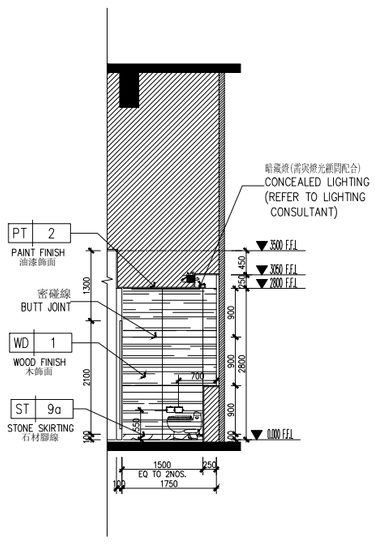

5 ELEVATION
立面图 SCALE 1:50

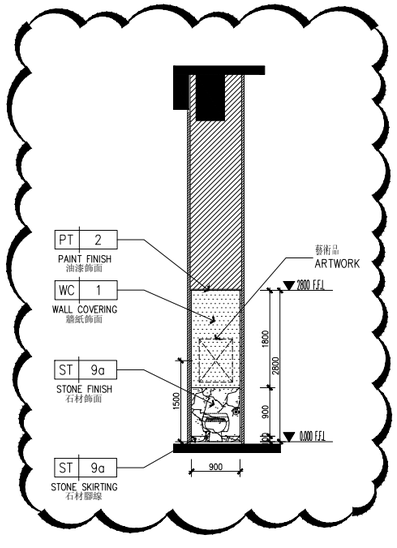

6 ELEVATION
立面图 SCALE 1:50

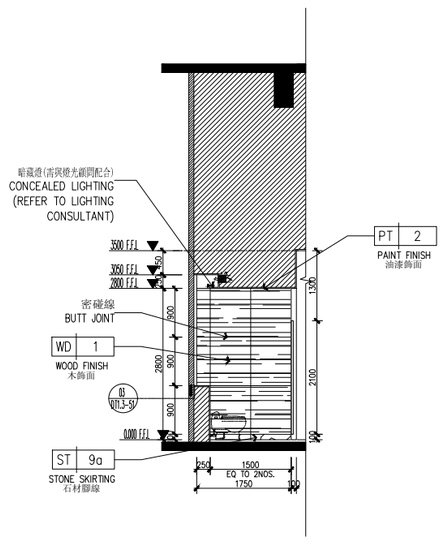

7 ELEVATION
立面图 SCALE 1:50

设计单位	CCD 香港郑中设计有限公司 CHENG CHUNG DESIGN (HK) LTD.
图纸深化	YASHA 雅仕维 浙江亚厦装饰股份有限公司

4B01 - 4B02, EXCELLENCE TIMES PLAZA, 4068 YITIAN ROAD
FUTIAN DISTRICT, SHENZHEN, CHINA
TEL. NO. +86-755-2399-4999 FAX. NO. +86-755-8384-9557
E-MAIL: DESIGN@CCD.COM.HK

DRAWING TITLE
PUBLIC AREA - 公共部份
LEVEL 1 - 一層
RESTROOM - 洗手間
ELEVATION - 立面圖

ALL DESIGNS AND SPECIFICATIONS ARE THE PROPERTY OF CHENG CHUNG DESIGN (HK) LTD., AND CANNOT USED WITHOUT THEIR WRITTEN PERMISSION, AND SHALL BE RETURNED UPON COMPLETION OF THE PROJECT. DO NOT SCALE DRAWINGS. ALL MEASUREMENTS MUST BE CHECKED ON SITE BY THE CONTRACTORS AND ANY DISCREPANCIES BROUGHT TO THE ATTENTION OF THE DESIGNER OR ARCHITECT. THIS DRAWING IS TO BE USED FOR THE PROJECT AND WITH IN ENTIRETY AND NOT TO BE USED ON ANY OTHER PROJECT.

REVISION	DATE
1	01 APR, 2013

Scale 比例 1 : 50 @ A1
Date 日期 20 DEC, 2012
Designed BY 設計 Drawn BY 繪圖
Job NO. 項目編號 APPROVED BY 核准
HK-1024
Sheet NO. 圖號 EL-1.5-05