FOR CONSTRUCTION
DATE: 01 JUNE, 2013

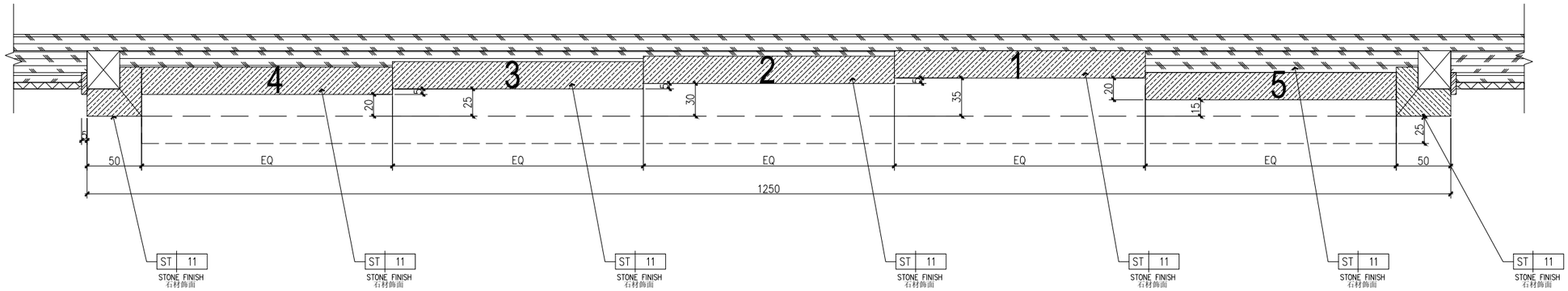

1 PLAN
平面图 SCALE 1:2

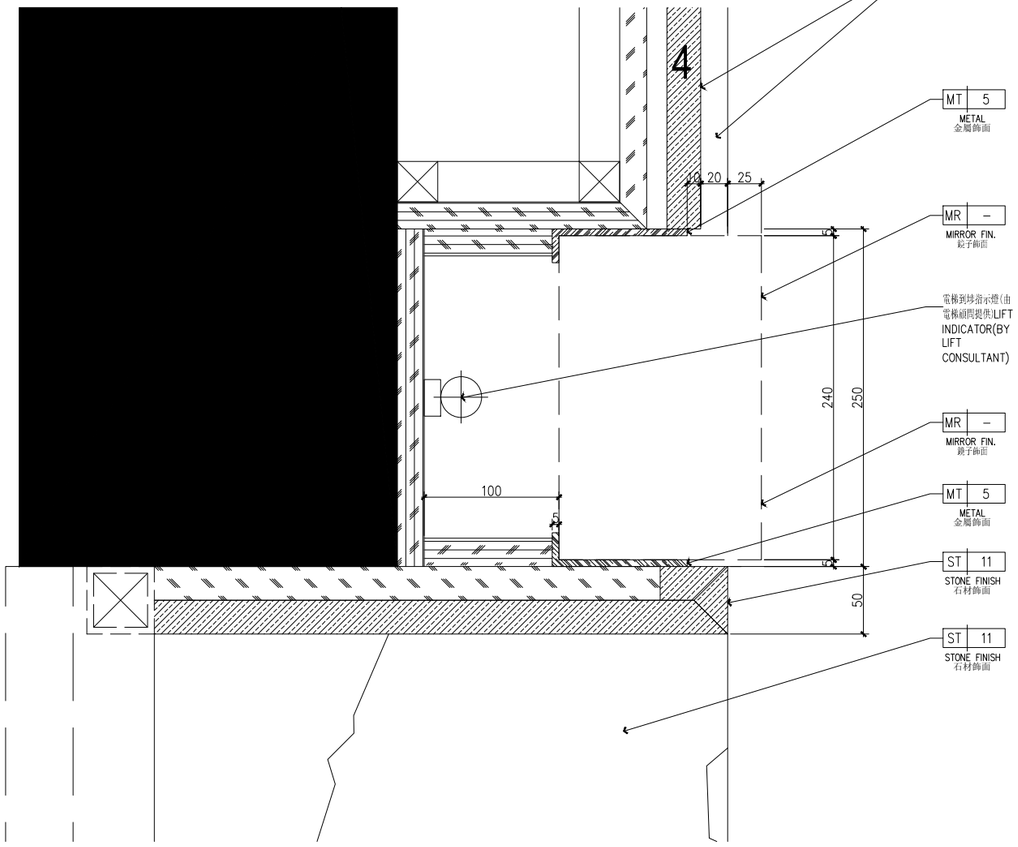

4 DETAIL
大樣圖 SCALE 1: 2

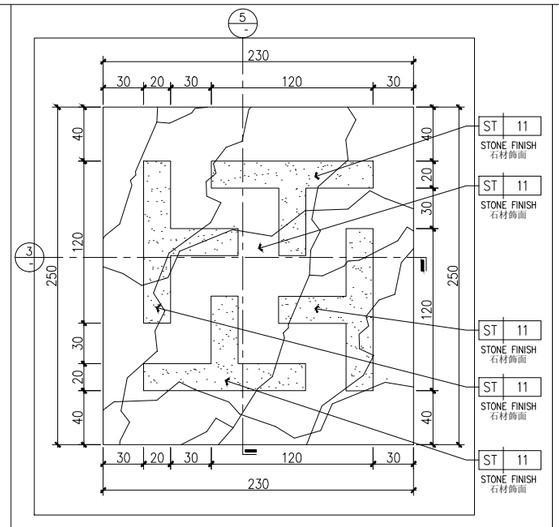

2 DETAIL
大樣圖 SCALE 1: 2

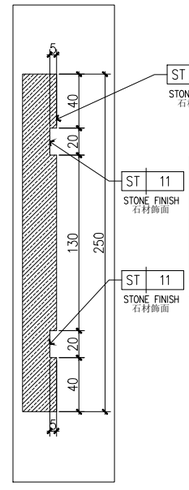

3 DETAIL
大樣圖 SCALE 1: 2

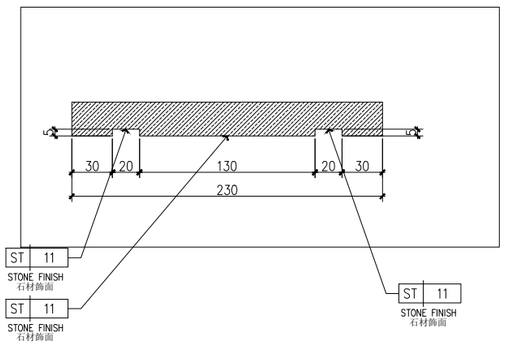

5 DETAIL
大樣圖 SCALE 1: 2

漳州融信皇冠假日酒店
RONGXIN CROWNE PLAZA HOTEL
ZHANGZHOU, CHINA

设计单位 CCD 香港滕中設計事務所 CHENGCHUNG DESIGN CO.,LTD.
图纸深化 YASHA 浙江亚厦装饰股份有限公司
4B01 - 4B02, EXCELLENCE TIMES PLAZA, 4068 YITIAN ROAD
FUTIAN DISTRICT, SHENZHEN, CHINA
TEL. NO. +86-755-2399-4999 FAX. NO. +86-755-8384-9557
E-MAIL: DESIGN@CCD.COM.HK

DRAWING TITLE

PUBLIC AREA – 公共部份
LEVEL 1 – 一層
LOBBY – 大堂
LIFT DOOR DETAILS – 升降機門大樣圖

ALL DESIGNS AND SPECIFICATIONS ARE THE PROPERTY OF CHENG CHUNG DESIGN CO.,LTD., AND CANNOT USED WITHOUT THEIR WRITTEN PERMISSION, THE SAME SHALL BE RETURNED UPON COMPLETION OF THE PROJECT. DO NOT SCALE DRAWINGS. ALL MEASUREMENTS MUST BE CHECKED ON SITE BY THE CONTRACTORS AND ANY DISCREPANCIES BROUGHT TO THE ATTENTION OF THE DESIGNER OR ARCHITECT. THIS DRAWING IS TO BE USED FOR THE PROJECT AND SEE IDENTIFIED AND NOT TO BE USED ON ANY OTHER PROJECT.

REVISION	DATE

Scale 比例	Date 日期
AS SHOWN	20 DEC, 2012
Designed BY 設計	Drawn BY 繪圖
Job NO. 項目編號	APPROVED BY 核准
HK-1024	

Sheet NO. 圖號

DT-1.28-03