HBA
HIRSCH/BEDNER
ASSOCIATES
DESIGN CONSULTANTS
23/F INFINITUS PLAZA
199 DES VOEUX ROAD
CENTRAL / HONG KONG
www.HBAdesign.com
FAX 852.2545.2051/5190
TEL 852.2542.2022

IRONMONGERY SCHEDULE 小五金細明表

Landison Hotel Xiaoshan Hangzhou 雷迪森酒店蕭山杭州

小五金細明表

L2 ALL DAY DINING – 二層全日西餐廳

Issued: 31 Aug 2011

Project No.	2829.00
Series	
Type	

TO : **HBA** / HIRSCH BEDNER ASSOCIATES DESIGN CONSULTANTS

DATE : 17 AUG 2011

PREPARED BY : MASSFORD (HK) LTD.

REF. : AF2-467-IR-L2-2 / JY

PROJECT :

LANDISON HOTEL, XIAOSHAN, HANGZHOU
杭州蕭山雷迪森酒店
- IRONMONGERY 小五金
LEVEL 2 ALL DAY DINNING

DOOR MARK	DOOR THK.	DOOR SIZE (W) X (H)	LEAF/ SWING	DOOR TYPE	F.R.P. (mins)	DOOR HAND	LOCATION	QTY.	DESCRIPTION	LOCKSET					KEY SYS.	HINGE				CLOSER			STOPPER		MISCELLANEOUS				
										ID-L1	ID-L2	ID-L3	ID-L4	ID-IB1		ID-H1	ID-H2	ID-H3	ID-FS1	ID-C1	ID-C2	ID-C3	ID-S1	ID-S2	ID-CMH	ID-PF1	ID-FB1	ID-DP1	ID-ST1
										"COLOMBO" AF254-JM11-RY-C+"BONCO" AF254-B2-4626-4622S-F21 70MM B/S LEVER HANDLE EUROPROFILE MORTISE ENTRANCE LOCKSET WITH CYLINDER & TURN, CHROME FINISH	"COLOMBO" AF254-JM11-RY-C+"BONCO" AF254-B2-4626S-4622H-F21 70MM B/S LEVER HANDLE EUROPROFILE MORTISE STOREROOM LOCKSET WITH HALF CYLINDER ONLY, CHROME FINISH	"COLOMBO" AF254-CD43GB-C+"BONCO" AF254-B2-4626D-4622S-F21 70MM B/S CYLINDER ESCUTCHEONS EUROPROFILE MORTISE DEADLOCK WITH CYLINDER & TURN, CHROME FINISH	"BONCO" AF254-B2-4640-4652-F25/F21 50MM B/S MORTISE PRIVACY SLIDING DOOR HOOK LOCK WITH EMERGENCY RELEASE & TURN W/ INDICATOR, POLISHED S/S FINISH	"BONCO" AF254-B2-4639-F25 40MM B/S EMERGENCY RELEASE DEAD BOLT WITH INDICTOR, POLISHED S/S FINISH		"BONCO" AF254-B1-4330BB-F25 102X76X3.0MM S/S BUTT HINGE WITH 2 BALL BEARING WASHER, POLISHED S/S FINISH	"BONCO" AF254-B1-4535BB-F25 114X114X3.5MM S/S BUTT HINGE WITH 2 BALL BEARING WASHER, POLISHED S/S FINISH	"BONCO" AF254-B1-4330R-F25 102X76X3.0MM S/S RISING HINGE, POLISHED S/S FINISH	"BONCO" AF254-B3-FH-311-F25 CENTER HUNG FLOOR SPRING HINGE WITHOUT HOLD-OPEN FUNCTION, POLISHED S/S FINISH	"BONCO" AF254-B3-CR383-F72 CONCEALED OVERHEAD DOOR CLOSER, SILVER FINISH	"BONCO" AF254-B3-1000-F72 SURFACE MOUNTED OVERHEAD DOOR CLOSER, SILVER FINISH	"BONCO" AF254-B3-P1000-F72 SURFACE MOUNTED OVERHEAD DOOR CLOSER WITH PARALLEL ARM, SILVER FINISH	"MF" AF254-DH005-PSS S/S FLOOR MOUNTED DOOR STOP, POLISHED S/S FINISH	"BONCO" AF254-B5-DS003-F21 DOME SHAPE FLOOR MOUNTED DOOR STOP, CHROME PLATED FINISH	**(CUSTOM MADE HANDLE)**	"BONCO" AF254-B1-PF101B/PF101C/PF102-F25 TOP & BOTTOM PATCH FITTING WITH PATCH LOCK, POLISHED S/S FINISH COVER PLATE **(FOR 12MM GLASS)**	"BONCO" AF254-B5-FB019-F25 8" & 12" S/S LEVER ACTION FLUSH BOLT, POLISHED S/S FINISH (TOP & BOTTOM)	"BONCO" AF254-B5-DP042-F21 DUST PROOF SOCKET, CHROME PLATED FINISH	"BONCO" AF254-B5-DT082-F72-2M SLIDING DOOR TRACK WITH ACCESSORIES, SILVER FINISH **(MAX. LOADING 120kg)**
LEVEL 2 ALL DAY DINNING																													
D201	12	750 x 2100	S/S	GLASS	45	LH	WINE CELLAR	**1**											1				1		1	1			
D202	45	700+700 x 2100	D/S	-	-	DL	KITCHEN BOH	**1**				1				6					2			2	2		1	1	
D203-R	60	800 x 2100	S/S	H.C.	-	RH	PANTRY, STORAGE	**2**		1							3				1			1					
D203-L	60	800 x 2100	S/S	H.C.	-	LH	STORAGE	**2**		1							3				1			1					
D204	60	700+700 x 2100	D/S	H.C.	-	DL	DOOR TO BOH	**6**	1								6				2			2			1	1	
D205	60	690 x 2400	S/S	H.C.	-	LHR	JANITOR ROOM	**1**		1							3					1							
D206-L	60	900 x 2100	S/S	H.C.	-	LHR	DOOR TO BOH	**1**		1							3					1	1						
D206-R	60	900 x 2100	S/S	H.C.	-	RHR	DOOR TO BOH	**1**		1							3					1	1						
D207	60	960 x 2400	S-SLIDE	H.C.	-	-	DIS. TOILET	**1**				1													1				1
D208-L	60	800 x 2400	S/S	H.C.	-	LH	MALE REST RM.	**1**			1						3			1			1		1				
D208-R	60	800 x 2400	S/S	H.C.	-	RH	FEMALE REST RM.	**1**			1						3			1			1		1				
D209-R	45	700 x 2000	S/S	H.C.	-	RH	W.C.CUBICLE	**5**					1					3											
D209-L	45	700 x 2000	S/S	H.C.	-	LH	W.C.CUBICLE	**2**					1					3											
										ID-L1	ID-L2	ID-L3	ID-L4	ID-IB1		ID-H1	ID-H2	ID-H3	ID-FS1	ID-C1	ID-C2	ID-C3	ID-S1	ID-S2	ID-CMH	ID-PF1	ID-FB1	ID-DP1	ID-ST1
							TOTAL :	**25**		**6**	**7**	**3**	**1**	**7**		**6**	**63**	**21**	**1**	**2**	**18**	**3**	**5**	**18**	**6**	**1**	**7**	**7**	**1**

Note: **D203** **IN PROGRESS**

PROJECT : LANDISON HOTEL, XIAOSHAN, HANGZHOU *杭州蕭山雷迪森酒店*
- IRONMONGERY *小五金* LEVEL 2 ALL DAY DINNING

Item Code : ID-L1

Type : LOCKSET

Product Description : "COLOMBO" AF254-JM11-RY-C+"BONCO" AF254-B2-4626-4622S-F21 70MM B/S LEVER HANDLE EUROPROFILE MORTISE ENTRANCE LOCKSET WITH CYLINDER & TURN, CHROME FINISH

Item Photo Image & Details :

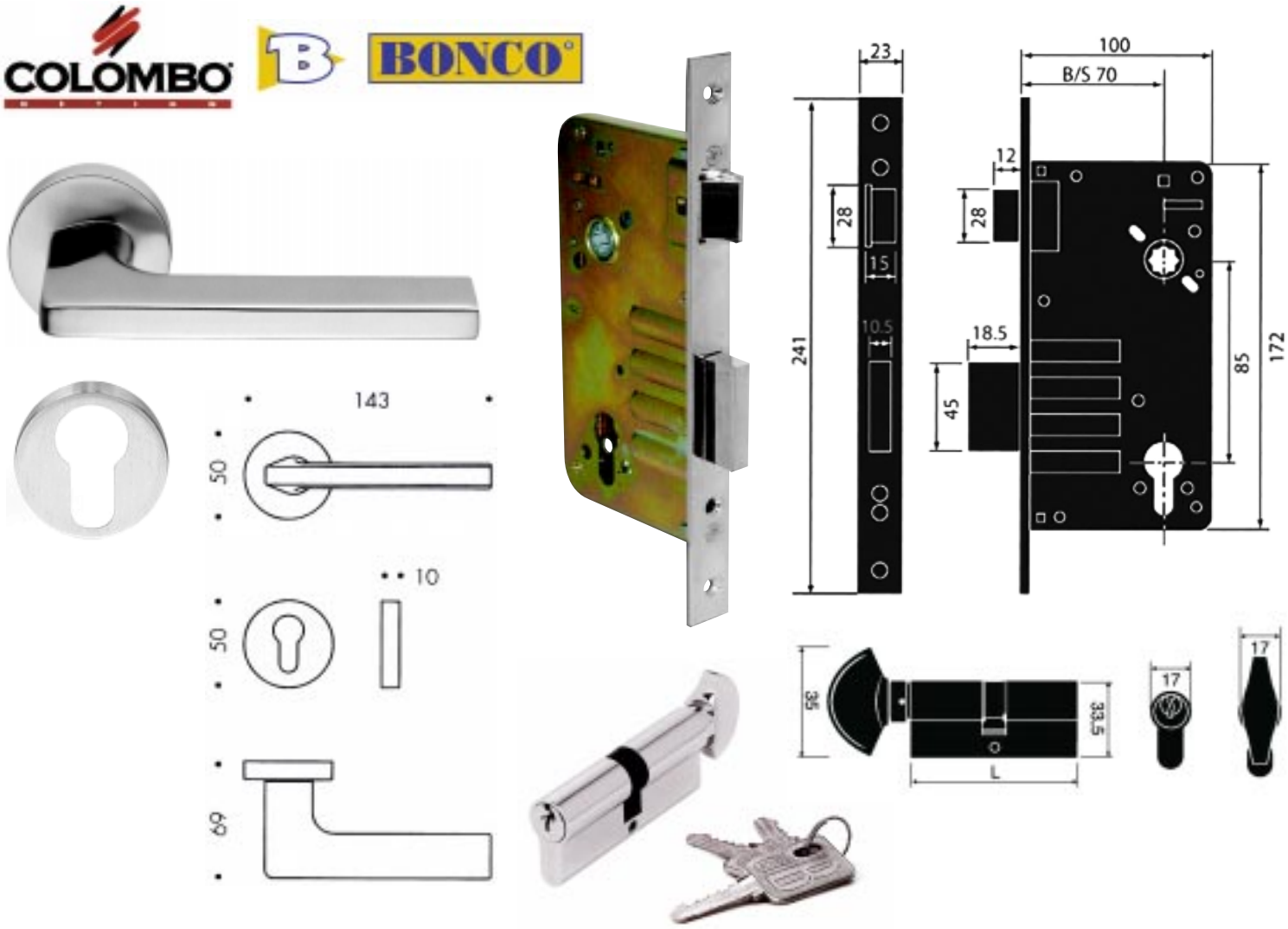

LOCATIONS	EXTERNAL APPEARANCES		OPERATIONS
	OUTSIDE	INSIDE	
Entrance	Lever Cylinder	Lever Thumbturn	Latchbolt by levers both sides. Deadbolt by key outside, by thumbturn inside.

Date : 17 AUG 2011 Ref. : AF2JY-1088-IR (L2)-2 ~ AF2-467-IR-L2-2 / JY

Massford (HK) Ltd. 美富(香港)有限公司 A Member of E. Bon Holdings (HKEx stock code 599)
17/F, First Commercial Building, 33 Leighton Road, Causeway Bay, Hong Kong. 香港銅鑼灣禮頓道33號第一商業大廈17樓
Tel : (852) 2891 6860 Fax : (852) 2834 3029 info@massford.com www.ebon.com.hk

The Seller shall be under no liability for any loss or damage resulting from misuse, neglect, omission or corrosion due to abnormal exposure to chemicals, adverse environment, accident to the product, force majeure or improper installation. Manufacturers may change specifications, terms and conditions without prior notice, products shown in the corresponding catalogue are for reference only. No warranty nor guarantee, expressed or implied is given.

PROJECT : LANDISON HOTEL, XIAOSHAN, HANGZHOU *杭州蕭山雷迪森酒店*
- IRONMONGERY *小五金* LEVEL 2 ALL DAY DINNING

Item Code : ID-L2

Type : LOCKSET

Product Description : "COLOMBO" AF254-JM11-RY-C+"BONCO" AF254-B2-4626S-4622H-F21 70MM B/S LEVER HANDLE EUROPROFILE MORTISE STOREROOM LOCKSET WITH HALF CYLINDER ONLY, CHROME FINISH

Item Photo Image & Details :



LOCATIONS	EXTERNAL APPEARANCES		OPERATIONS
	OUTSIDE	INSIDE	
Storeroom	Rigid  Cylinder	Lever	Latchbolt by levers insides only. Outside lever always rigid .

Date : 17 AUG 2011 Ref. : AF2JY-1088-IR (L2)-2 ~ AF2-467-IR-L2-2 / JY

MASSFORD
Massford (HK) Ltd. 美富(香港)有限公司 A Member of E. Bon Holdings (HKEx stock code 599)
17/F, First Commercial Building, 33 Leighton Road, Causeway Bay, Hong Kong. 香港銅鑼灣禮頓道33號第一商業大廈17樓
Tel : (852) 2891 6860 Fax : (852) 2834 3029 info@massford.com www.ebon.com.hk

The Seller shall be under no liability for any loss or damage resulting from misuse, neglect, omission or corrosion due to abnormal exposure to chemicals, adverse environment, accident to the product, force majeure or improper installation. Manufacturers may change specifications, terms and conditions without prior notice, products shown in the corresponding catalogue are for reference only. No warranty nor guarantee, expressed or implied is given.

PROJECT : LANDISON HOTEL, XIAOSHAN, HANGZHOU *杭州蕭山雷迪森酒店*
- IRONMONGERY *小五金* LEVEL 2 ALL DAY DINNING

Item Code : ID-L3

Type : LOCKSET

Product Description : "COLOMBO" AF254-CD43GB-C+"BONCO" AF254-B2-4626D-4622S-F21
70MM B/S CYLINDER ESCUTCHEONS EUROPROFILE MORTISE DEADLOCK
WITH CYLINDER & TURN, CHROME FINISH

Item Photo Image & Details :

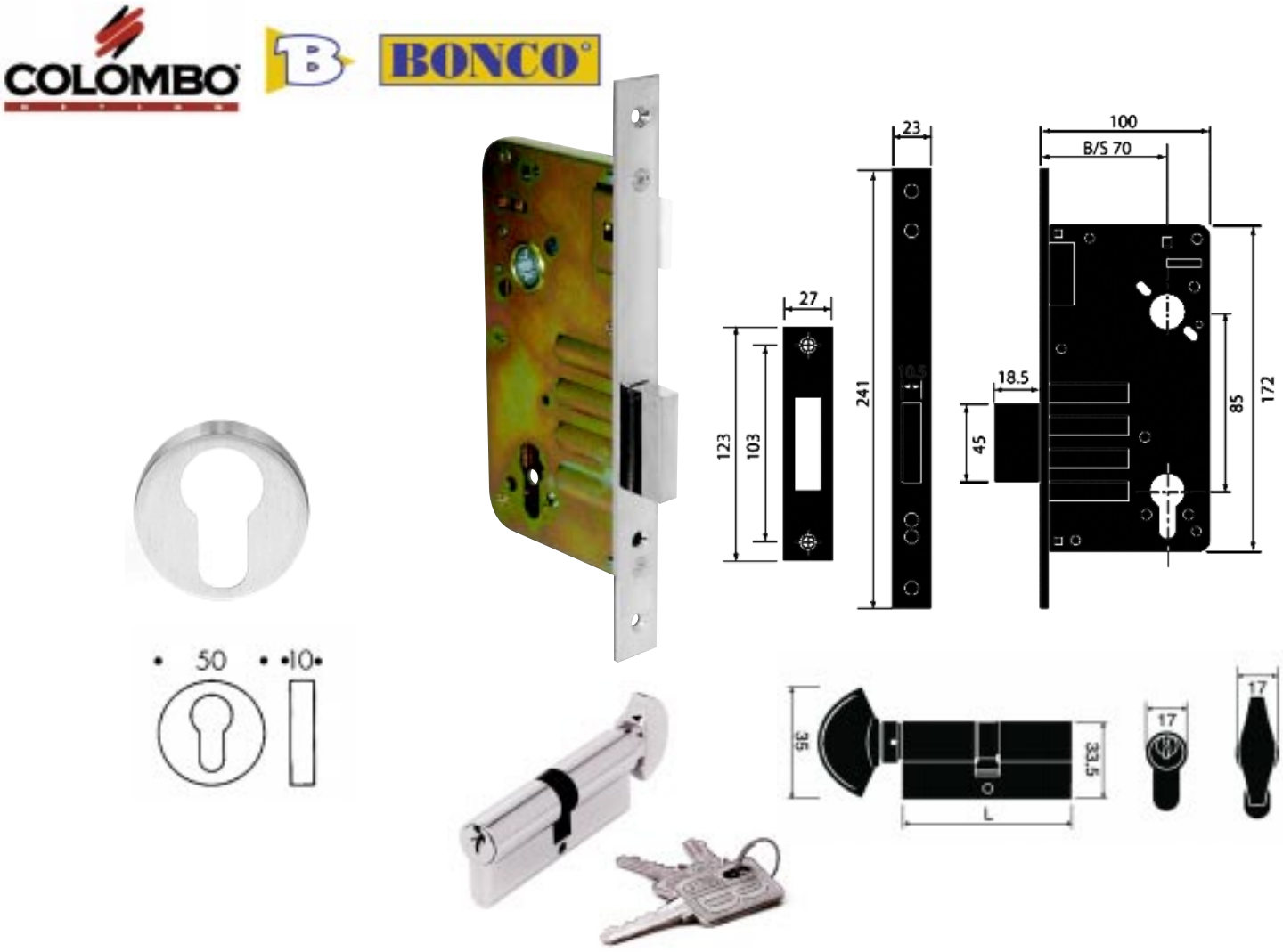

LOCATIONS	EXTERNAL APPEARANCES		OPERATIONS
	OUTSIDE	INSIDE	
Single Cylinder Deadlock	Cylinder 	Thumbturn	Deadbolt by key outside, by thumbturn inside.

Date : 17 AUG 2011 Ref. : AF2JY-1088-IR (L2)-2 ~ AF2-467-IR-L2-2 / JY

Massford (HK) Ltd. 美富(香港)有限公司 A Member of E. Bon Holdings (HKEx stock code 599)
17/F, First Commercial Building, 33 Leighton Road, Causeway Bay, Hong Kong. 香港銅鑼灣禮頓道33號第一商業大廈17樓
Tel : (852) 2891 6860 Fax : (852) 2834 3029 info@massford.com www.ebon.com.hk

The Seller shall be under no liability for any loss or damage resulting from misuse, neglect, omission or corrosion due to abnormal exposure to chemicals, adverse environment, accident to the product, force majeure or improper installation. Manufacturers may change specifications, terms and conditions without prior notice, products shown in the corresponding catalogue are for reference only. No warranty nor guarantee, expressed or implied is given.

PROJECT : LANDISON HOTEL, XIAOSHAN, HANGZHOU *杭州蕭山雷迪森酒店*
- IRONMONGERY *小五金* LEVEL 2 ALL DAY DINNING

Item Code : ID-L4

Type : LOCKSET

Product Description : "BONCO" AF254-B2-4640-4652-F25/F21 50MM B/S MORTISE PRIVACY SLIDING DOOR HOOK LOCK WITH EMERGENCY RELEASE & TURN W/ INDICATOR, POLISHED S/S FINISH

Item Photo Image & Details :

BONCO

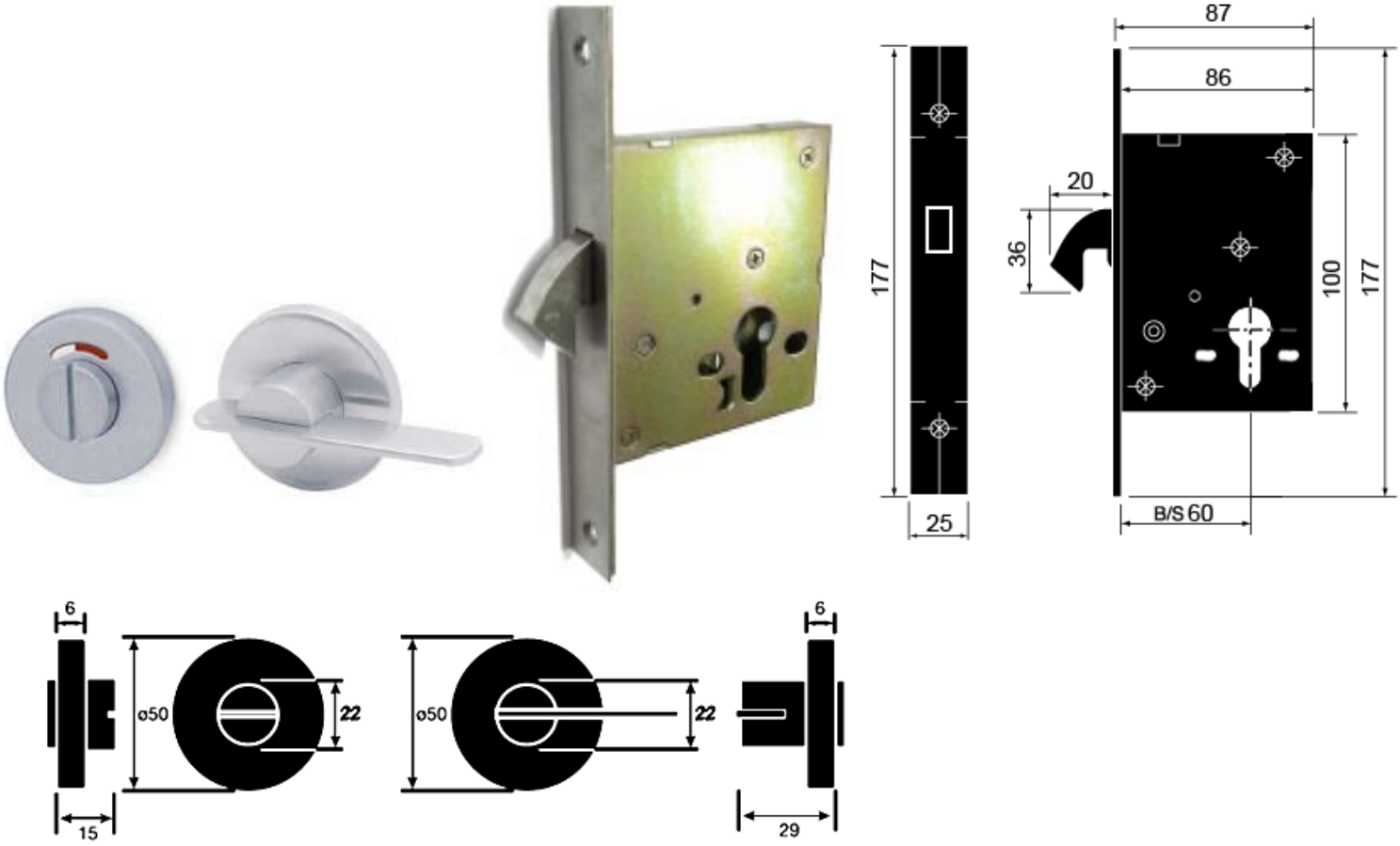

Date : 17 AUG 2011 Ref. : AF2JY-1088-IR (L2)-2 ~ AF2-467-IR-L2-2 / JY

MASSFORD
Massford (HK) Ltd. 美富(香港)有限公司 A Member of E. Bon Holdings (HKEx stock code 599)
17/F, First Commercial Building, 33 Leighton Road, Causeway Bay, Hong Kong. 香港銅鑼灣禮頓道33號第一商業大廈17樓
Tel : (852) 2891 6860 Fax : (852) 2834 3029 info@massford.com www.ebon.com.hk
The Seller shall be under no liability for any loss or damage resulting from misuse, neglect, omission or corrosion due to abnormal exposure to chemicals, adverse environment, accident to the product, force majeure or improper installation. Manufacturers may change specifications, terms and conditions without prior notice, products shown in the corresponding catalogue are for reference only. No warranty nor guarantee, expressed or implied is given.

PROJECT : LANDISON HOTEL, XIAOSHAN, HANGZHOU *杭州蕭山雷迪森酒店*
- IRONMONGERY *小五金* LEVEL 2 ALL DAY DINNING

Item Code : ID-IB1

Type : LOCKSET

Product Description : "BONCO" AF254-B2-4639-F25 40MM B/S EMERGENCY RELEASE DEAD BOLT WITH INDICTOR, POLISHED S/S FINISH

Item Photo Image & Details :





Inside

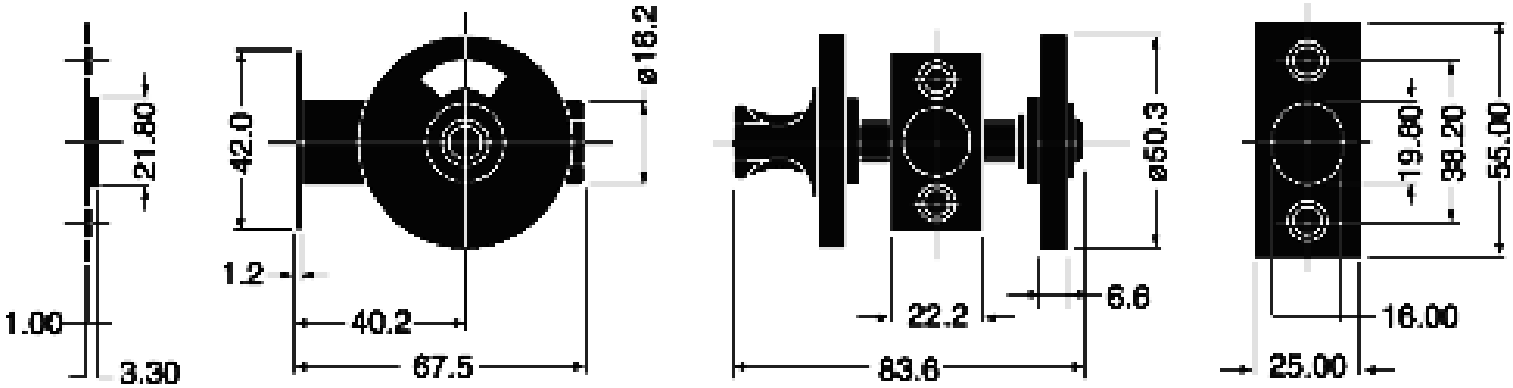

Date : 17 AUG 2011 Ref. : AF2JY-1088-IR (L2)-2 ~ AF2-467-IR-L2-2 / JY

Massford (HK) Ltd. 美富(香港)有限公司 A Member of E. Bon Holdings (HKEx stock code 599)
17/F, First Commercial Building, 33 Leighton Road, Causeway Bay, Hong Kong. 香港銅鑼灣禮頓道33號第一商業大廈17樓
Tel : (852) 2891 6860 Fax : (852) 2834 3029 info@massford.com www.ebon.com.hk
The Seller shall be under no liability for any loss or damage resulting from misuse, neglect, omission or corrosion due to abnormal exposure to chemicals, adverse environment, accident to the product, force majeure or improper installation. Manufacturers may change specifications, terms and conditions without prior notice, products shown in the corresponding catalogue are for reference only. No warranty nor guarantee, expressed or implied is given.

PROJECT : LANDISON HOTEL, XIAOSHAN, HANGZHOU *杭州蕭山雷迪森酒店*
- IRONMONGERY *小五金* LEVEL 2 ALL DAY DINNING

Item Code : ID-H1

Type : HINGE

Product Description : "BONCO" AF254-B1-4330BB-F25 102X76X3.0MM S/S BUTT HINGE WITH 2 BALL BEARING WASHER, POLISHED S/S FINISH

Item Photo Image & Details :

BONCO



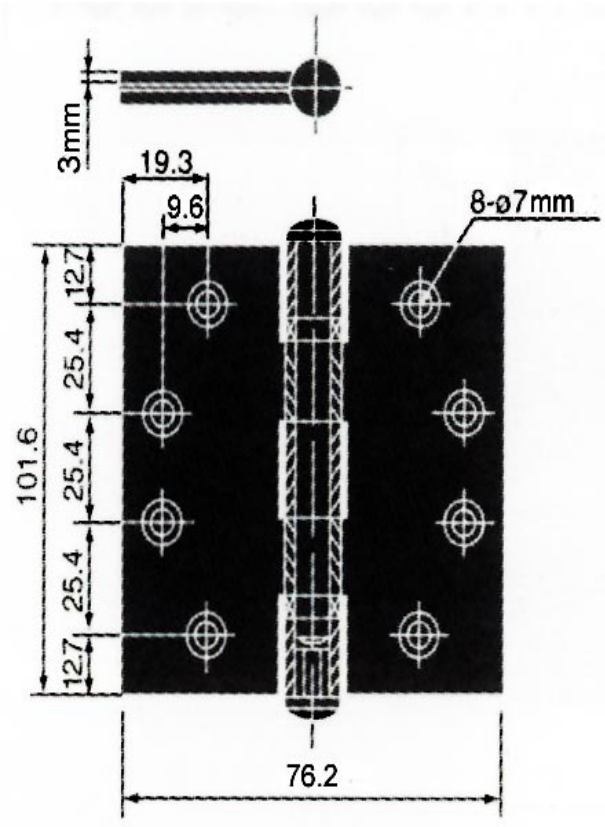

Date : 17 AUG 2011 Ref. : AF2JY-1088-IR (L2)-2 ~ AF2-467-IR-L2-2 / JY

MASSFORD
Massford (HK) Ltd. 美富(香港)有限公司 A Member of E. Bon Holdings (HKEx stock code 599)
17/F, First Commercial Building, 33 Leighton Road, Causeway Bay, Hong Kong. 香港銅鑼灣禮頓道33號第一商業大廈17樓
Tel : (852) 2891 6860 Fax : (852) 2834 3029 info@massford.com www.ebon.com.hk
The Seller shall be under no liability for any loss or damage resulting from misuse, neglect, omission or corrosion due to abnormal exposure to chemicals, adverse environment, accident to the product, force majeure or improper installation. Manufacturers may change specifications, terms and conditions without prior notice, products shown in the corresponding catalogue are for reference only. No warranty nor guarantee, expressed or implied is given.

PROJECT : LANDISON HOTEL, XIAOSHAN, HANGZHOU *杭州蕭山雷迪森酒店*
- IRONMONGERY *小五金* LEVEL 2 ALL DAY DINNING

Item Code : ID-H2

Type : HINGE

Product Description : "BONCO" AF254-B1-4535BB-F25 114X114X3.5MM S/S BUTT HINGE WITH 2 BALL BEARING WASHER, POLISHED S/S FINISH

Item Photo Image & Details :



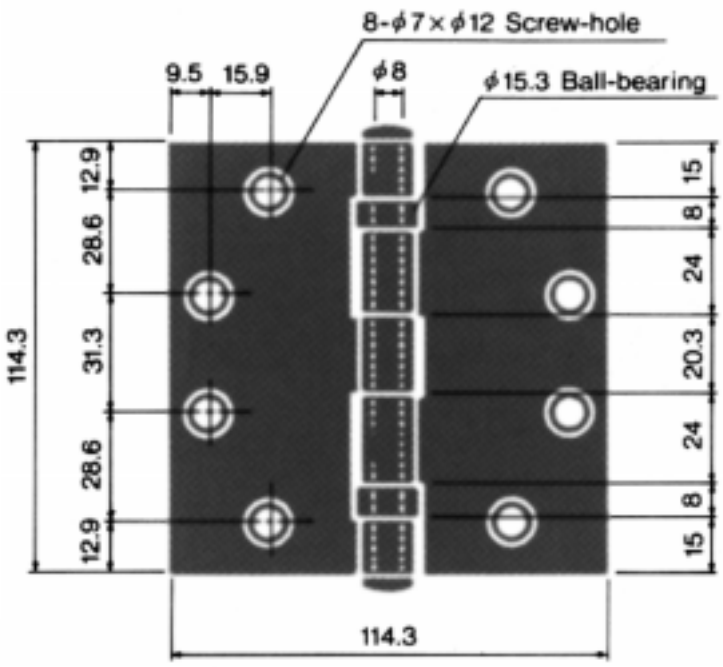

Date : 17 AUG 2011 Ref. : AF2JY-1088-IR (L2)-2 ~ AF2-467-IR-L2-2 / JY

MASSFORD
Massford (HK) Ltd. 美富(香港)有限公司 A Member of E. Bon Holdings (HKEx stock code 599)
17/F, First Commercial Building, 33 Leighton Road, Causeway Bay, Hong Kong. 香港銅鑼灣禮頓道33號第一商業大廈17樓
Tel : (852) 2891 6860 Fax : (852) 2834 3029 info@massford.com www.ebon.com.hk
The Seller shall be under no liability for any loss or damage resulting from misuse, neglect, omission or corrosion due to abnormal exposure to chemicals, adverse environment, accident to the product, force majeure or improper installation. Manufacturers may change specifications, terms and conditions without prior notice, products shown in the corresponding catalogue are for reference only. No warranty nor guarantee, expressed or implied is given.

PROJECT : LANDISON HOTEL, XIAOSHAN, HANGZHOU *杭州蕭山雷迪森酒店*
- IRONMONGERY *小五金* LEVEL 2 ALL DAY DINNING

Item Code : ID-H3

Type : HINGE

Product Description : "BONCO" AF254-B1-4330R-F25 102X76X3.0MM S/S RISING HINGE, POLISHED S/S FINISH

Item Photo Image & Details :

BONCO

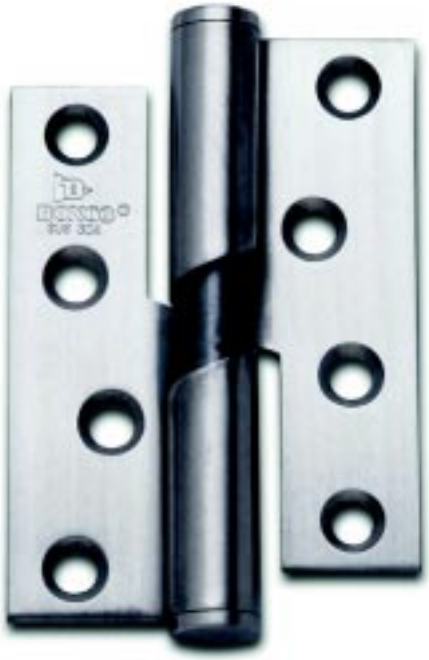

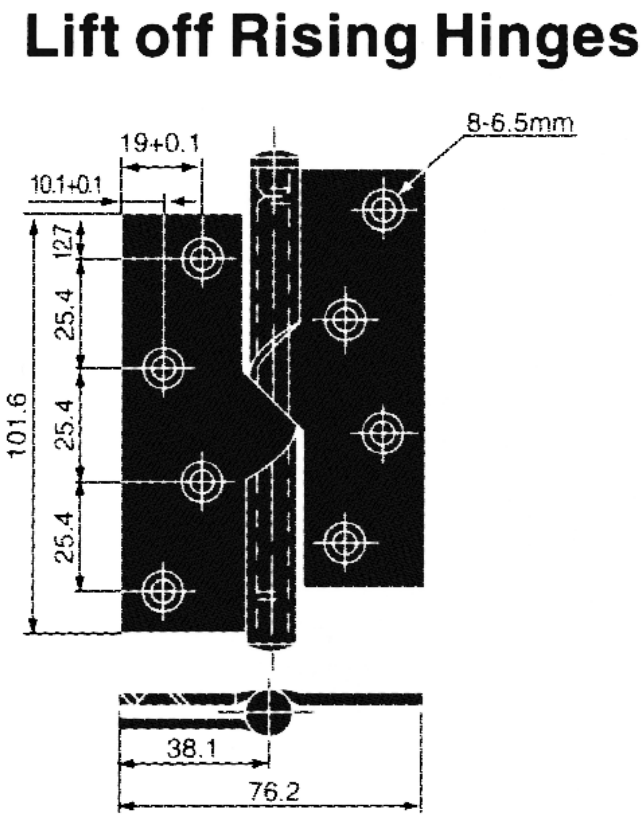

Date : 17 AUG 2011 Ref. : AF2JY-1088-IR (L2)-2 ~ AF2-467-IR-L2-2 / JY

MASSFORD
Massford (HK) Ltd. 美富(香港)有限公司 A Member of E. Bon Holdings (HKEx stock code 599)
17/F, First Commercial Building, 33 Leighton Road, Causeway Bay, Hong Kong. 香港銅鑼灣禮頓道33號第一商業大廈17樓
Tel : (852) 2891 6860 Fax : (852) 2834 3029 info@massford.com www.ebon.com.hk
The Seller shall be under no liability for any loss or damage resulting from misuse, neglect, omission or corrosion due to abnormal exposure to chemicals, adverse environment, accident to the product, force majeure or improper installation. Manufacturers may change specifications, terms and conditions without prior notice, products shown in the corresponding catalogue are for reference only. No warranty nor guarantee, expressed or implied is given.

PROJECT : LANDISON HOTEL, XIAOSHAN, HANGZHOU *杭州蕭山雷迪森酒店*
- IRONMONGERY *小五金* LEVEL 2 ALL DAY DINNING

Item Code : ID-FS1

Type : HINGE

Product Description : "BONCO" AF254-B3-FH-311-F25 CENTER HUNG FLOOR SPRING HINGE WITHOUT HOLD-OPEN FUNCTION, POLISHED S/S FINISH

Item Photo Image & Details :

BONCO



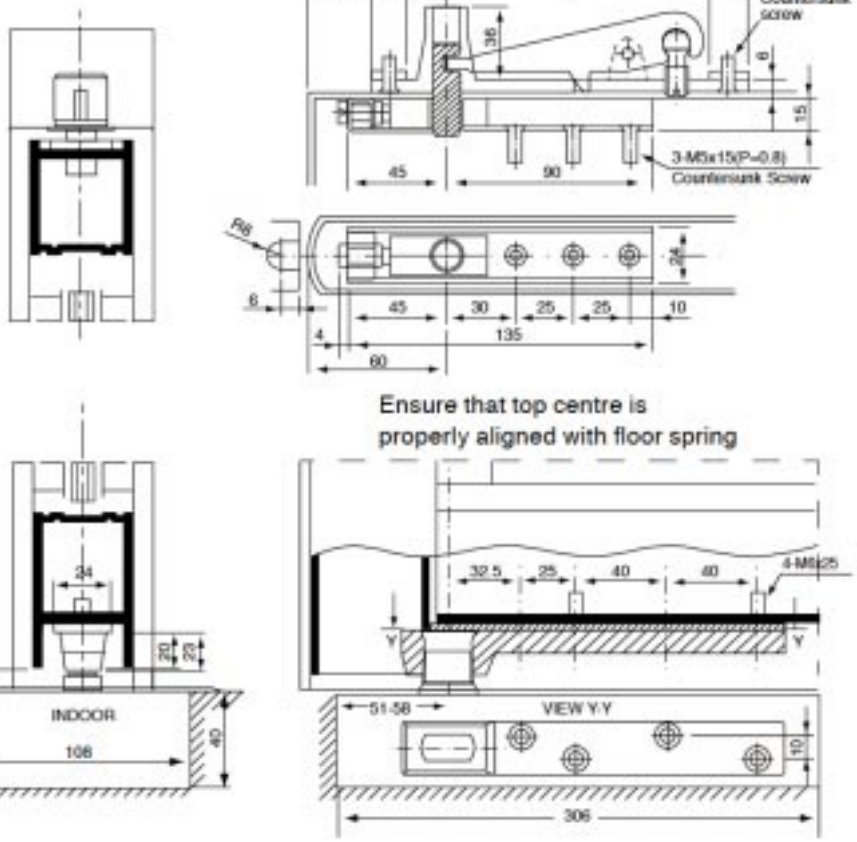

Without Hold Open	With Hold Open	Without Hold Open	With Hold Open	Applicable Door Dimensions (mm)	Max. Door Weight (kg)
FH-311	FH-S-311	FH-O-311	FH-OS-311	900 x 2100	70

Date : 17 AUG 2011 Ref. : AF2JY-1088-IR (L2)-2 ~ AF2-467-IR-L2-2 / JY

MASSFORD

Massford (HK) Ltd. 美富(香港)有限公司 A Member of E. Bon Holdings (HKEx stock code 599)
17/F, First Commercial Building, 33 Leighton Road, Causeway Bay, Hong Kong. 香港銅鑼灣禮頓道33號第一商業大廈17樓
Tel : (852) 2891 6860 Fax : (852) 2834 3029 info@massford.com www.ebon.com.hk

The Seller shall be under no liability for any loss or damage resulting from misuse, neglect, omission or corrosion due to abnormal exposure to chemicals, adverse environment, accident to the product, force majeure or improper installation. Manufacturers may change specifications, terms and conditions without prior notice, products shown in the corresponding catalogue are for reference only. No warranty nor guarantee, expressed or implied is given.

PROJECT : LANDISON HOTEL, XIAOSHAN, HANGZHOU *杭州蕭山雷迪森酒店*
- IRONMONGERY *小五金* LEVEL 2 ALL DAY DINNING

Item Code : ID-C1

Type : CLOSER

Product Description : "BONCO" AF254-B3-CR383-F72 CONCEALED OVERHEAD DOOR CLOSER, SILVER FINISH

Item Photo Image & Details :

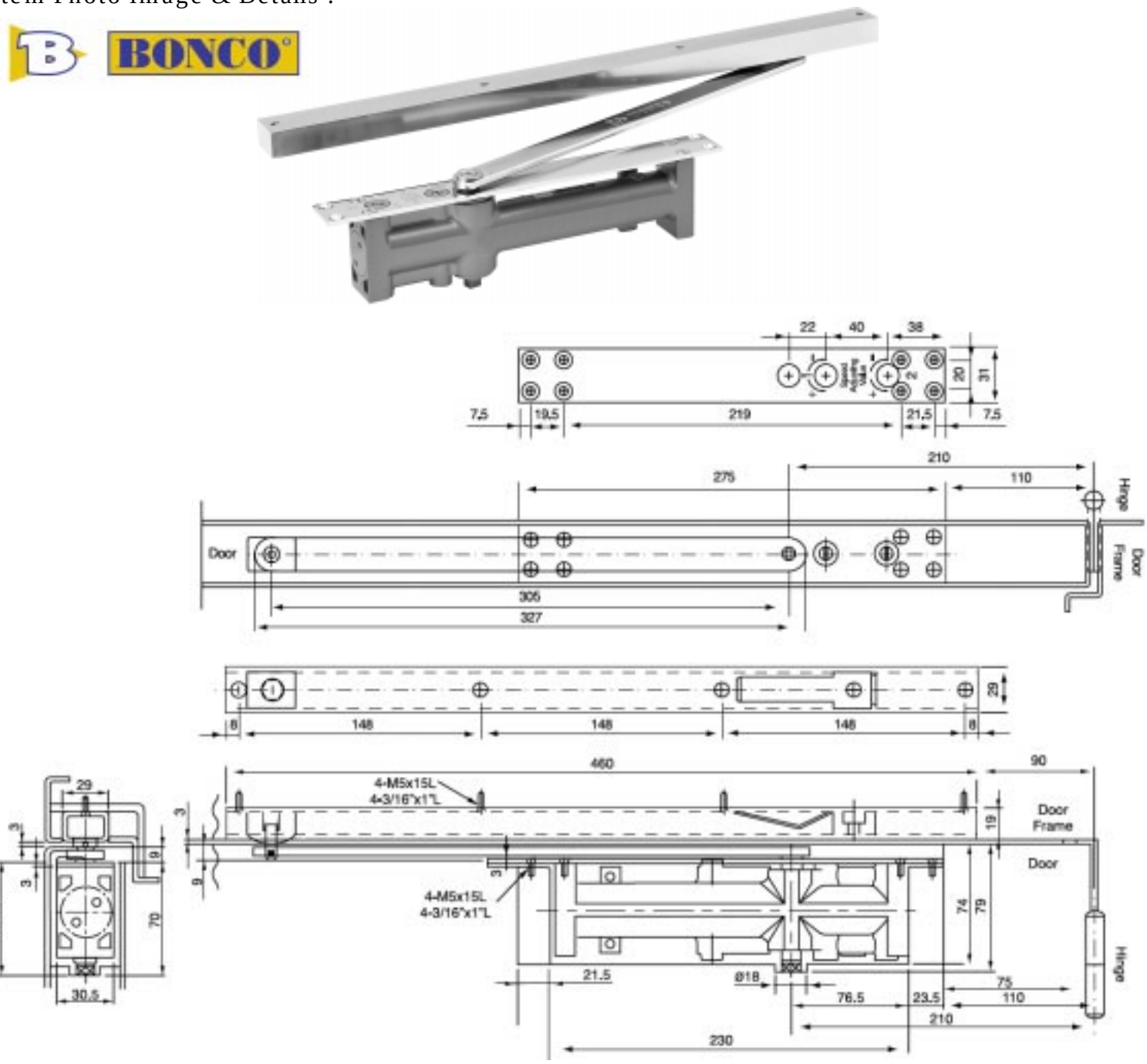

Date : 17 AUG 2011 Ref. : AF2JY-1088-IR (L2)-2 ~ AF2-467-IR-L2-2 / JY

MASSFORD

Massford (HK) Ltd. 美富(香港)有限公司 A Member of E. Bon Holdings (HKEx stock code 599)
17/F, First Commercial Building, 33 Leighton Road, Causeway Bay, Hong Kong. 香港銅鑼灣禮頓道33號第一商業大廈17樓
Tel : (852) 2891 6860 Fax : (852) 2834 3029 info@massford.com www.ebon.com.hk

The Seller shall be under no liability for any loss or damage resulting from misuse, neglect, omission or corrosion due to abnormal exposure to chemicals, adverse environment, accident to the product, force majeure or improper installation. Manufacturers may change specifications, terms and conditions without prior notice, products shown in the corresponding catalogue are for reference only. No warranty nor guarantee, expressed or implied is given.

PROJECT : LANDISON HOTEL, XIAOSHAN, HANGZHOU *杭州蕭山雷迪森酒店*
- IRONMONGERY *小五金* LEVEL 2 ALL DAY DINNING

Item Code : ID-C2

Type : CLOSER

Product Description : "BONCO" AF254-B3-1000-F72 SURFACE MOUNTED OVERHEAD DOOR CLOSER, SILVER FINISH

Item Photo Image & Details :

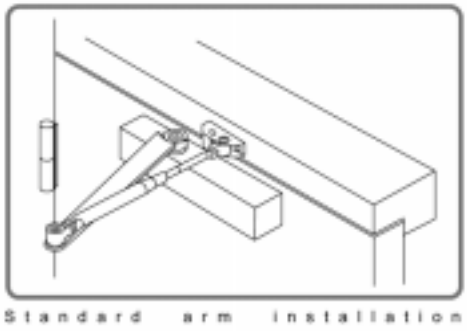





Door Leaf fixing, pull side
(Example refers to left-hand door; mirror image applies to right-hand door)

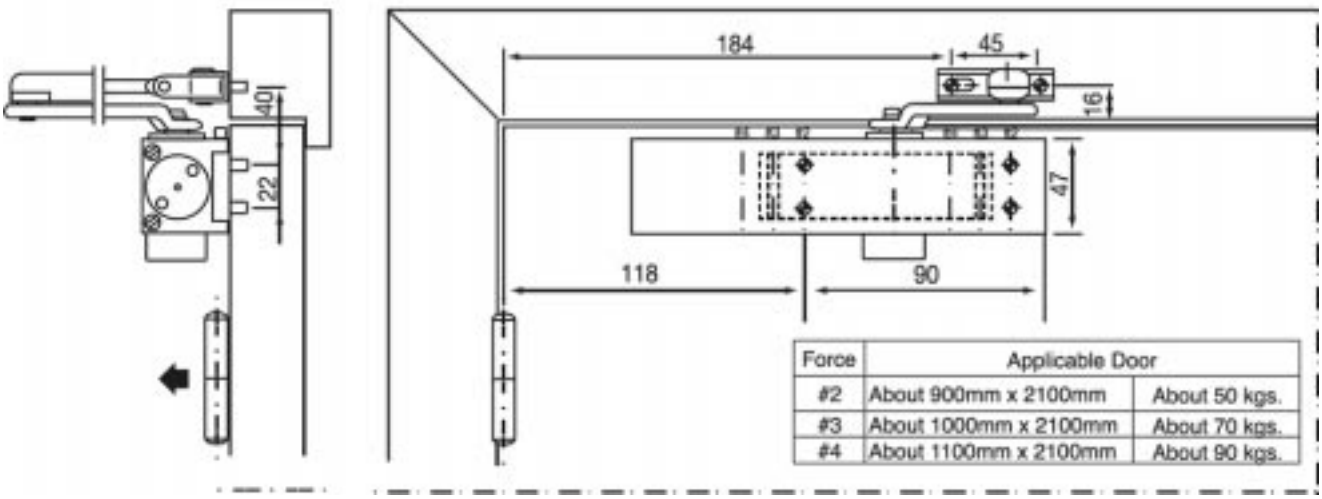

Force	Applicable Door	
#2	About 900mm x 2100mm	About 50 kgs.
#3	About 1000mm x 2100mm	About 70 kgs.
#4	About 1100mm x 2100mm	About 90 kgs.

Date : 17 AUG 2011 Ref. : AF2JY-1088-IR (L2)-2 ~ AF2-467-IR-L2-2 / JY

MASSFORD
Massford (HK) Ltd. 美富(香港)有限公司 A Member of E. Bon Holdings (HKEx stock code 599)
17/F, First Commercial Building, 33 Leighton Road, Causeway Bay, Hong Kong. 香港銅鑼灣禮頓道33號第一商業大廈17樓
Tel : (852) 2891 6860 Fax : (852) 2834 3029 info@massford.com www.ebon.com.hk
The Seller shall be under no liability for any loss or damage resulting from misuse, neglect, omission or corrosion due to abnormal exposure to chemicals, adverse environment, accident to the product, force majeure or improper installation. Manufacturers may change specifications, terms and conditions without prior notice, products shown in the corresponding catalogue are for reference only. No warranty nor guarantee, expressed or implied is given.

PROJECT : LANDISON HOTEL, XIAOSHAN, HANGZHOU *杭州蕭山雷迪森酒店*
- IRONMONGERY *小五金* LEVEL 2 ALL DAY DINNING

Item Code : ID-C3

Type : CLOSER

Product Description : "BONCO" AF254-B3-P1000-F72 SURFACE MOUNTED OVERHEAD DOOR CLOSER WITH PARALLEL ARM, SILVER FINISH

Item Photo Image & Details :

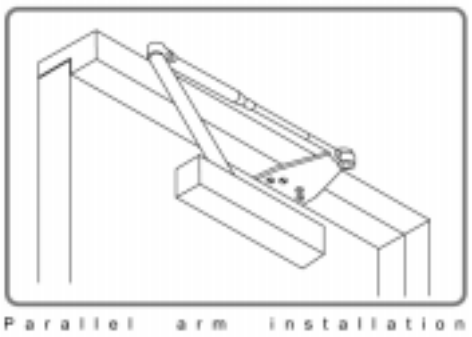



Parallel-arm fixing, push side
(Example refers to left-hand door; mirror image applies to right-hand door)
Parallel-arm backet (accessory) Necessary

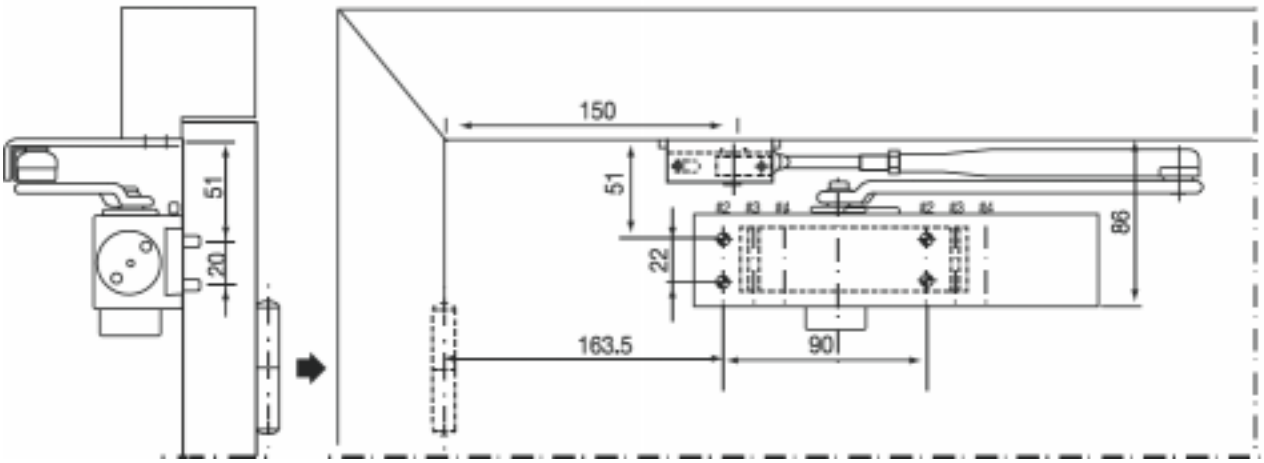

Date : 17 AUG 2011 Ref. : AF2JY-1088-IR (L2)-2 ~ AF2-467-IR-L2-2 / JY

Massford (HK) Ltd. 美富(香港)有限公司 A Member of E. Bon Holdings (HKEx stock code 599)
17/F, First Commercial Building, 33 Leighton Road, Causeway Bay, Hong Kong. 香港銅鑼灣禮頓道33號第一商業大廈17樓
Tel : (852) 2891 6860 Fax : (852) 2834 3029 info@massford.com www.ebon.com.hk
The Seller shall be under no liability for any loss or damage resulting from misuse, neglect, omission or corrosion due to abnormal exposure to chemicals, adverse environment, accident to the product, force majeure or improper installation. Manufacturers may change specifications, terms and conditions without prior notice, products shown in the corresponding catalogue are for reference only. No warranty nor guarantee, expressed or implied is given.

PROJECT : LANDISON HOTEL, XIAOSHAN, HANGZHOU *杭州蕭山雷迪森酒店*
- IRONMONGERY *小五金* LEVEL 2 ALL DAY DINNING

Item Code : ID-S1

Type : STOPPER

Product Description : "MF" AF254-DH005-PSS S/S FLOOR MOUNTED DOOR STOP, POLISHED S/S FINISH

Item Photo Image & Details :

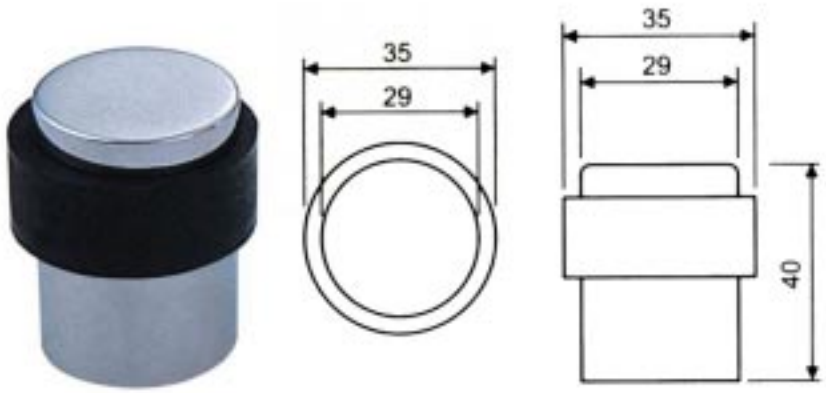

Date : 17 AUG 2011 Ref. : AF2JY-1088-IR (L2)-2 ~ AF2-467-IR-L2-2 / JY

Massford (HK) Ltd. 美富(香港)有限公司 A Member of E. Bon Holdings (HKEx stock code 599)
17/F, First Commercial Building, 33 Leighton Road, Causeway Bay, Hong Kong. 香港銅鑼灣禮頓道33號第一商業大廈17樓
Tel : (852) 2891 6860 Fax : (852) 2834 3029 info@massford.com www.ebon.com.hk
The Seller shall be under no liability for any loss or damage resulting from misuse, neglect, omission or corrosion due to abnormal exposure to chemicals, adverse environment, accident to the product, force majeure or improper installation. Manufacturers may change specifications, terms and conditions without prior notice, products shown in the corresponding catalogue are for reference only. No warranty nor guarantee, expressed or implied is given.

PROJECT : LANDISON HOTEL, XIAOSHAN, HANGZHOU *杭州蕭山雷迪森酒店*
- IRONMONGERY *小五金* LEVEL 2 ALL DAY DINNING

Item Code : ID-S2

Type : STOPPER

Product Description : "BONCO" AF254-B5-DS003-F21 DOME SHAPE FLOOR MOUNTED DOOR STOP, CHROME PLATED FINISH

Item Photo Image & Details :



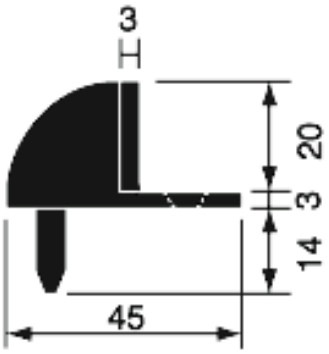

Date : 17 AUG 2011 Ref. : AF2JY-1088-IR (L2)-2 ~ AF2-467-IR-L2-2 / JY

Massford (HK) Ltd. 美富(香港)有限公司 A Member of E. Bon Holdings (HKEx stock code 599)
17/F, First Commercial Building, 33 Leighton Road, Causeway Bay, Hong Kong. 香港銅鑼灣禮頓道33號第一商業大廈17樓
Tel : (852) 2891 6860 Fax : (852) 2834 3029 info@massford.com www.ebon.com.hk
The Seller shall be under no liability for any loss or damage resulting from misuse, neglect, omission or corrosion due to abnormal exposure to chemicals, adverse environment, accident to the product, force majeure or improper installation. Manufacturers may change specifications, terms and conditions without prior notice, products shown in the corresponding catalogue are for reference only. No warranty nor guarantee, expressed or implied is given.

PROJECT : LANDISON HOTEL, XIAOSHAN, HANGZHOU *杭州蕭山雷迪森酒店*
- IRONMONGERY *小五金* LEVEL 2 ALL DAY DINNING

Item Code : ID-PF1

Type : MISCELLANEOUS

Product Description : '"BONCO" AF254-B1-PF101B/PF101C/PF102-F25 TOP & BOTTOM PATCH FITTING WITH PATCH LOCK, POLISHED S/S FINISH COVER PLATE (FOR 12MM GLASS)

Item Photo Image & Details :



Date : 17 AUG 2011 Ref. : AF2JY-1088-IR (L2)-2 ~ AF2-467-IR-L2-2 / JY

Massford (HK) Ltd. 美富(香港)有限公司 A Member of E. Bon Holdings (HKEx stock code 599)
17/F, First Commercial Building, 33 Leighton Road, Causeway Bay, Hong Kong. 香港銅鑼灣禮頓道33號第一商業大廈17樓
Tel : (852) 2891 6860 Fax : (852) 2834 3029 info@massford.com www.ebon.com.hk
The Seller shall be under no liability for any loss or damage resulting from misuse, neglect, omission or corrosion due to abnormal exposure to chemicals, adverse environment, accident to the product, force majeure or improper installation. Manufacturers may change specifications, terms and conditions without prior notice, products shown in the corresponding catalogue are for reference only. No warranty nor guarantee, expressed or implied is given.

PROJECT : LANDISON HOTEL, XIAOSHAN, HANGZHOU *杭州蕭山雷迪森酒店*
- IRONMONGERY *小五金* LEVEL 2 ALL DAY DINNING

Item Code : ID-FB1

Type : MISCELLANEOUS

Product Description : "BONCO" AF254-B5-FB019-F25 8" & 12" S/S LEVER ACTION FLUSH BOLT, POLISHED S/S FINISH (TOP & BOTTOM)

Item Photo Image & Details :

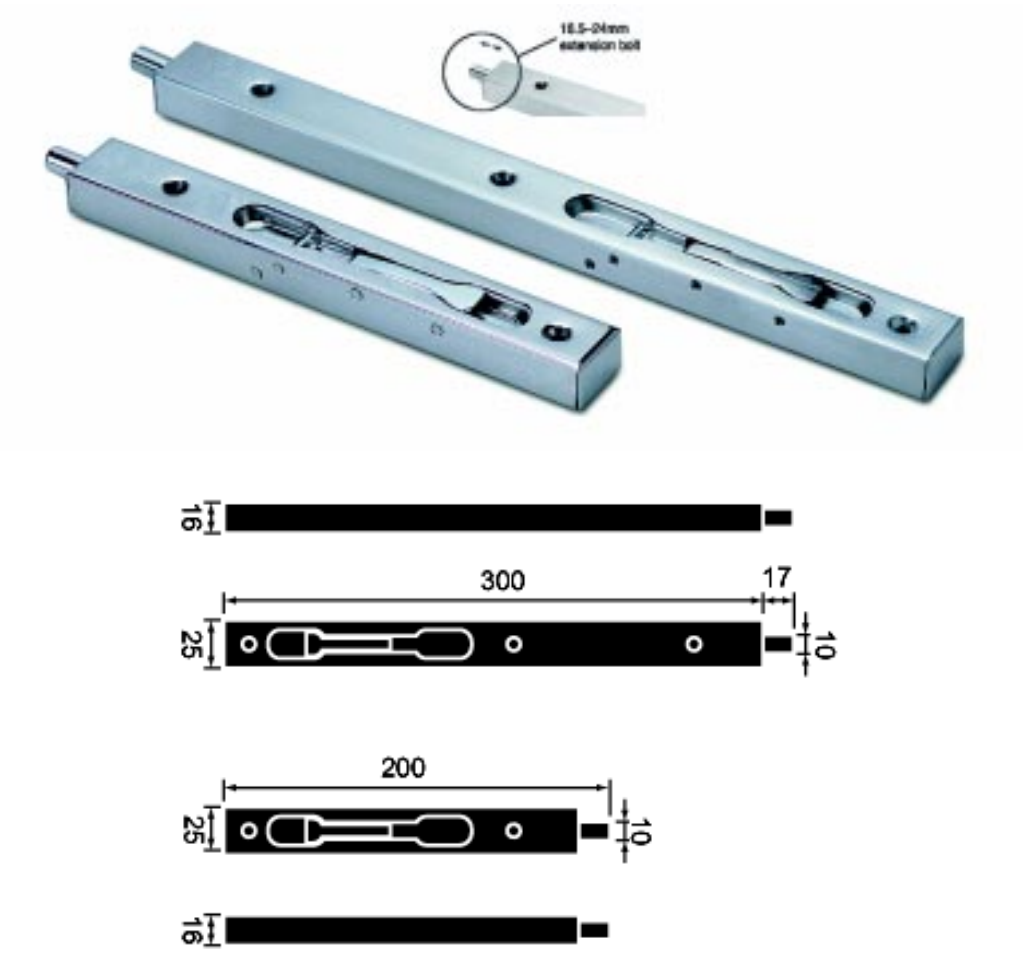

Date : 17 AUG 2011 Ref. : AF2JY-1088-IR (L2)-2 ~ AF2-467-IR-L2-2 / JY

Massford (HK) Ltd. 美富(香港)有限公司 A Member of E. Bon Holdings (HKEx stock code 599)
17/F, First Commercial Building, 33 Leighton Road, Causeway Bay, Hong Kong. 香港銅鑼灣禮頓道33號第一商業大廈17樓
Tel : (852) 2891 6860 Fax : (852) 2834 3029 info@massford.com www.ebon.com.hk
The Seller shall be under no liability for any loss or damage resulting from misuse, neglect, omission or corrosion due to abnormal exposure to chemicals, adverse environment, accident to the product, force majeure or improper installation. Manufacturers may change specifications, terms and conditions without prior notice, products shown in the corresponding catalogue are for reference only. No warranty nor guarantee, expressed or implied is given.

PROJECT : LANDISON HOTEL, XIAOSHAN, HANGZHOU *杭州蕭山雷迪森酒店*
- IRONMONGERY *小五金* LEVEL 2 ALL DAY DINNING

Item Code : ID-DP1

Type : MISCELLANEOUS

Product Description : "BONCO" AF254-B5-DP042-F21 DUST PROOF SOCKET, CHROME PLATED FINISH

Item Photo Image & Details :

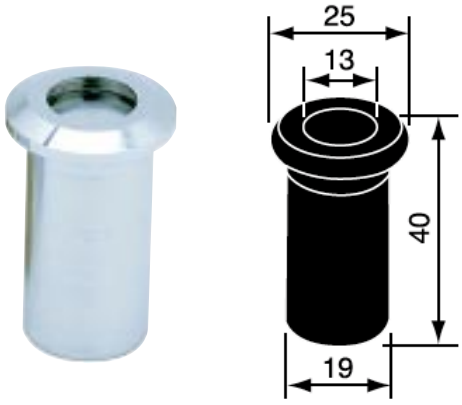

Date : 17 AUG 2011 Ref. : AF2JY-1088-IR (L2)-2 ~ AF2-467-IR-L2-2 / JY

Massford (HK) Ltd. 美富(香港)有限公司 A Member of E. Bon Holdings (HKEx stock code 599)
17/F, First Commercial Building, 33 Leighton Road, Causeway Bay, Hong Kong. 香港銅鑼灣禮頓道33號第一商業大廈17樓
Tel : (852) 2891 6860 Fax : (852) 2834 3029 info@massford.com www.ebon.com.hk
The Seller shall be under no liability for any loss or damage resulting from misuse, neglect, omission or corrosion due to abnormal exposure to chemicals, adverse environment, accident to the product, force majeure or improper installation. Manufacturers may change specifications, terms and conditions without prior notice, products shown in the corresponding catalogue are for reference only. No warranty nor guarantee, expressed or implied is given.

PROJECT : LANDISON HOTEL, XIAOSHAN, HANGZHOU *杭州蕭山雷迪森酒店*
- IRONMONGERY *小五金* LEVEL 2 ALL DAY DINNING

Item Code : ID-ST1

Type : MISCELLANEOUS

Product Description : "BONCO" AF254-B5-DT082-F72-2M SLIDING DOOR TRACK WITH ACCESSORIES, SILVER FINISH (MAX. LOADING 120kg)

Item Photo Image & Details :

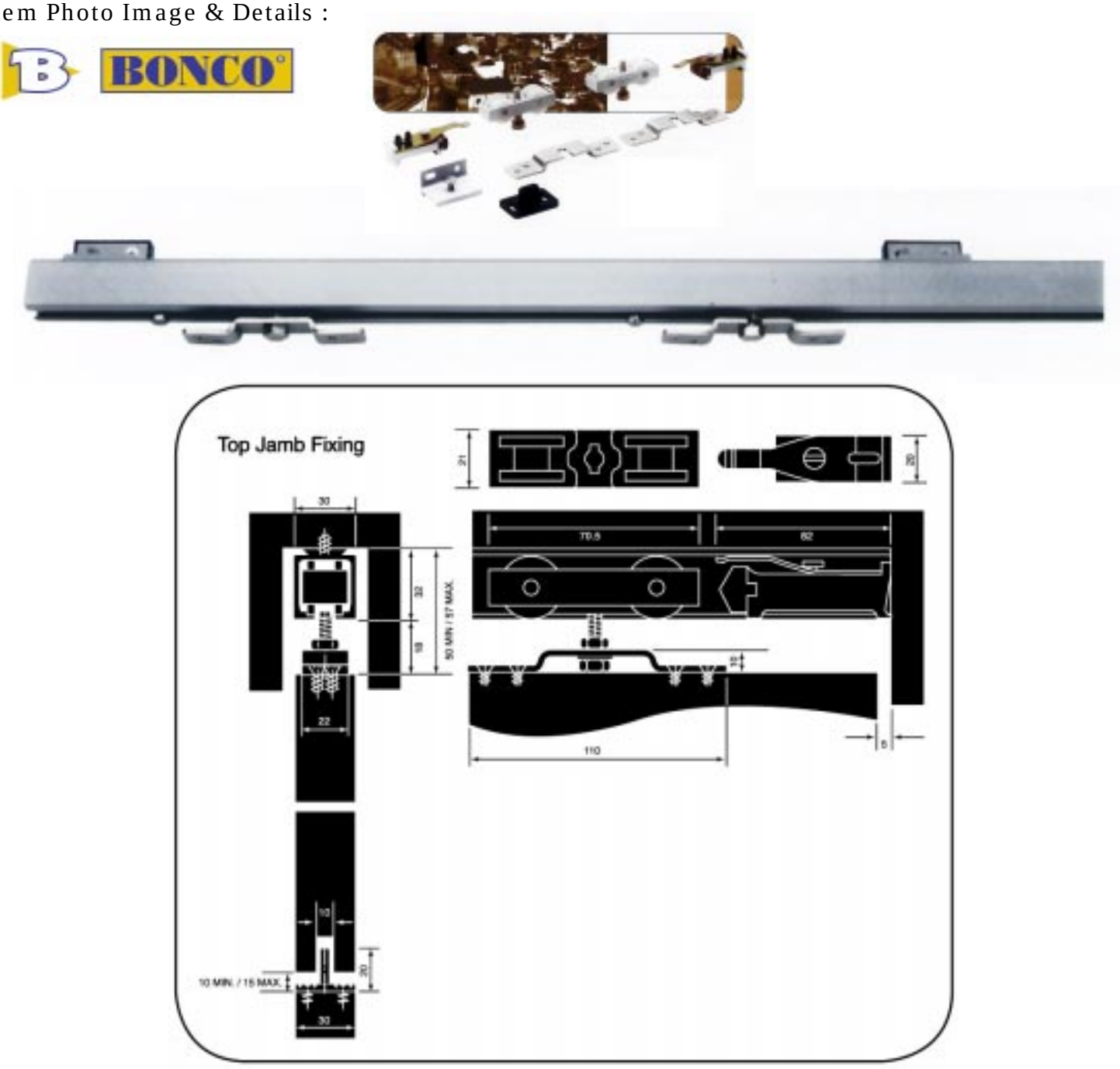

Date : 17 AUG 2011 Ref. : AF2JY-1088-IR (L2)-2 ~ AF2-467-IR-L2-2 / JY

Massford (HK) Ltd. 美富(香港)有限公司 A Member of E. Bon Holdings (HKEx stock code 599)
17/F, First Commercial Building, 33 Leighton Road, Causeway Bay, Hong Kong. 香港銅鑼灣禮頓道33號第一商業大廈17樓
Tel : (852) 2891 6860 Fax : (852) 2834 3029 info@massford.com www.ebon.com.hk
The Seller shall be under no liability for any loss or damage resulting from misuse, neglect, omission or corrosion due to abnormal exposure to chemicals, adverse environment, accident to the product, force majeure or improper installation. Manufacturers may change specifications, terms and conditions without prior notice, products shown in the corresponding catalogue are for reference only. No warranty nor guarantee, expressed or implied is given.