© COPYRIGHT BY HIRSCH/BEDNER AND ASSOCIATES ALL RIGHTS RESERVED.

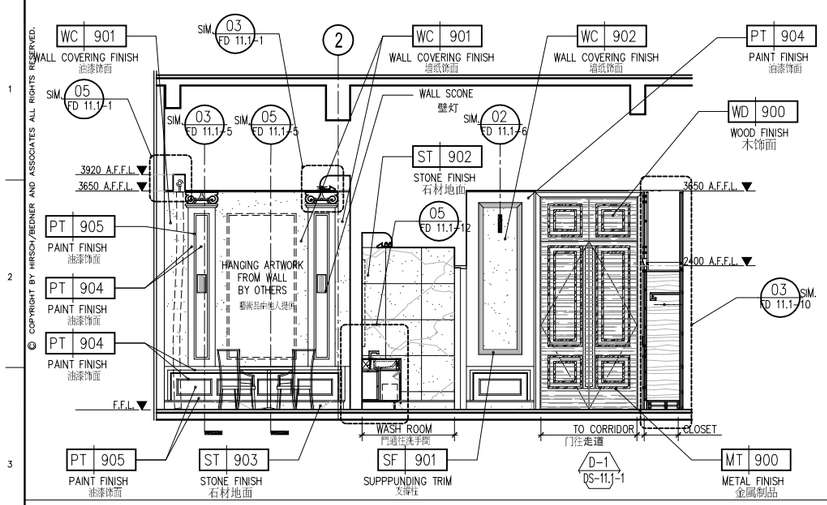

1 ELEVATION @ PDR 5 立面图 私人包廂5
Scale: 1:50

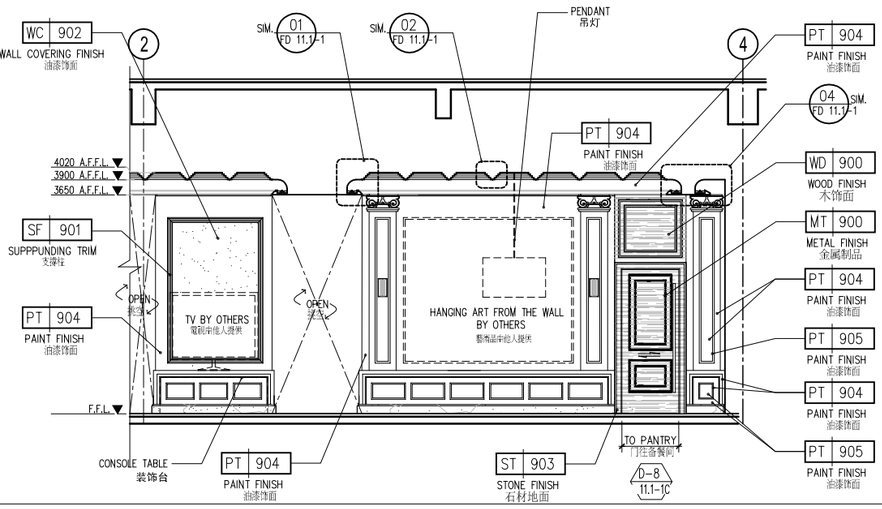

2 ELEVATION 立面图
Scale: 1:50

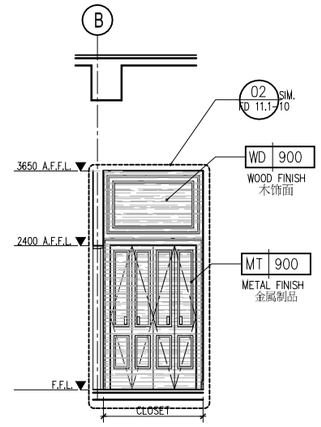

3 ELEVATION 立面图
Scale: 1:50

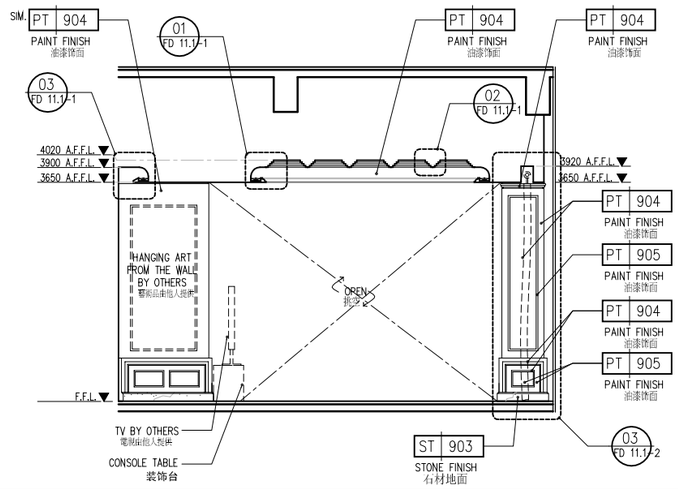

4 ELEVATION 立面图
Scale: 1:50

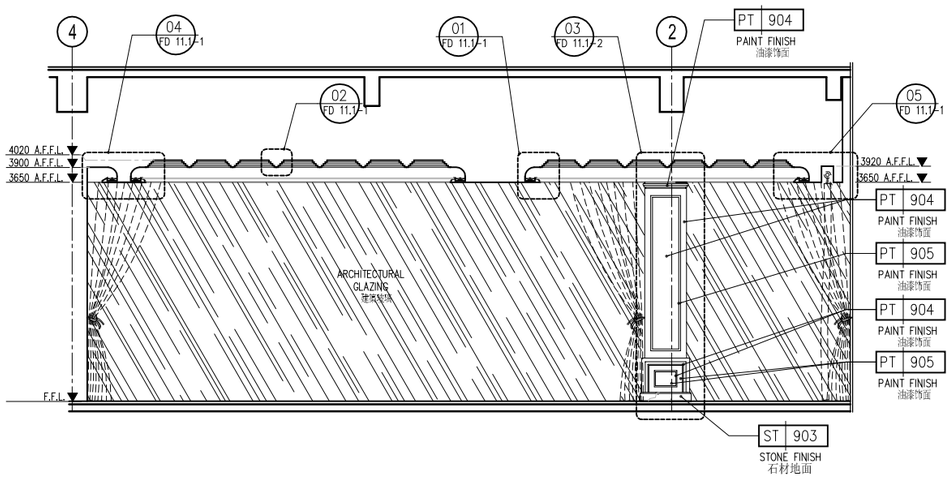

5 ELEVATION 立面图
Scale: 1:50

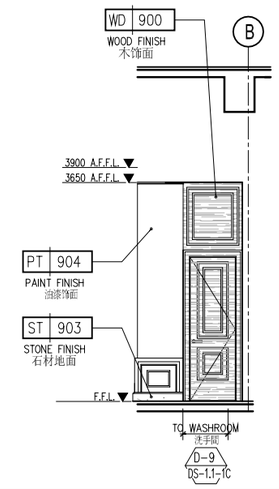

6 ELEVATION 立面图
Scale: 1:50

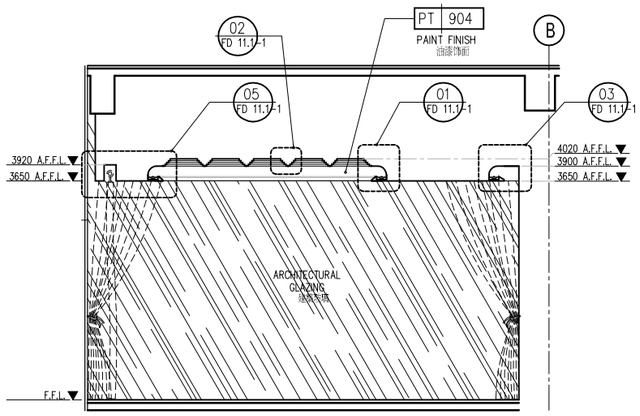

7 ELEVATION 立面图
Scale: 1:50

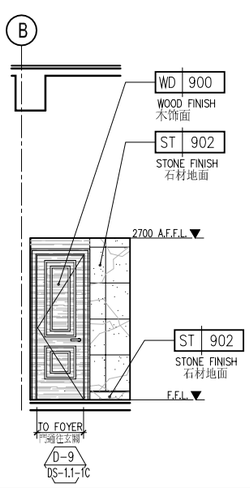

8 ELEVATION 立面图
Scale: 1:50

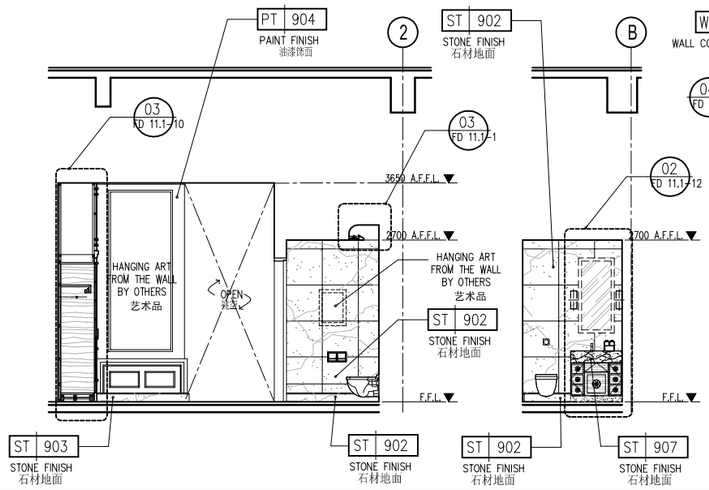

9 ELEVATION 立面图
Scale: 1:50

10 ELEVATION 立面图
Scale: 1:50

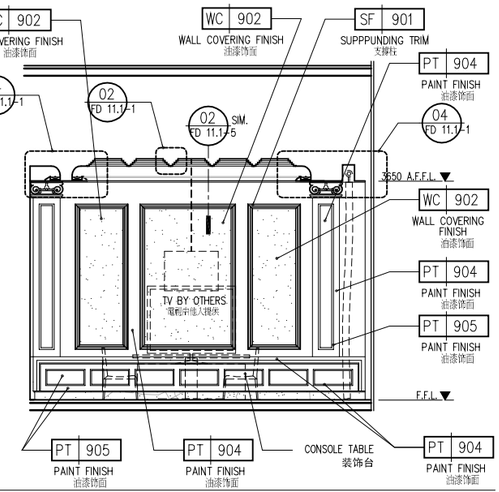

11 ELEVATION 立面图
Scale: 1:50

HIRSCH BEDNER ASSOCIATES ■ DESIGN CONSULTANTS ■ 23/F VICWOOD PLAZA ■ 199 DES VOEUX ROAD CENTRAL ■ HONG KONG ■ 852-2542-2022

WWW.HBADESIGN.COM

杭州萧山雷迪森酒店
LANDISON HOTEL
XIAOSHAN HANGZHOU

LANDISON HOTELS & RESORTS

LEVEL 36
PRIVATE CLUB PDR 5
ELEVATIONS
二十六层私人会所私人包廂立面图 私人包廂5
DRAWING TITLE

REVISIONS DATE

This drawing is for information only to be used by the contractors as a general arrangement of interior conditions. It has been made from available information, however measurements are to be verified on project site. This drawing must be verified and approved prior to final detailing and fabrication.
This drawing is the property of HIRSCH BEDNER AND ASSOCIATES and is not to be reproduced or copied in whole or in part. It is only to be used for the project and site specifically identified herein and is not to be used on any other project. It is to be returned upon request.

APPROVED
DRAWN BY
DATE ----
SCALE 1:50

SHEET No.
EL 11.1-2
PROJECT No.
2829.00